Off Road Pickup

Designed by Madoca

Building Instructions by Jokey02

This building instructions are made to support the building of the Off Road Pickup as designed by Madoca. The original photo sequence is still needed because of the positioning of wires. The front and backlights with switch are not provided in this BI, so when you want to add this feature you also need the original photo sequence.

©jokey02

1

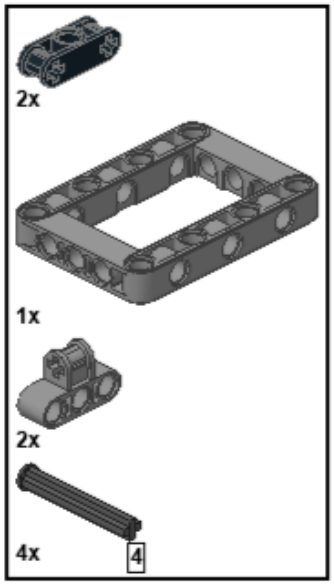

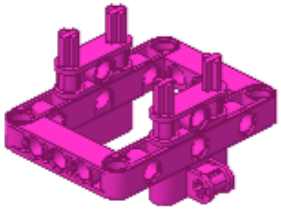

©jokey02

2

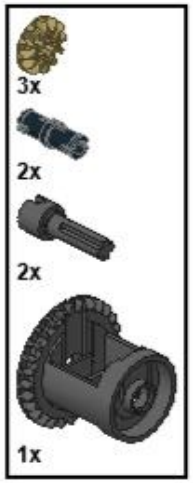

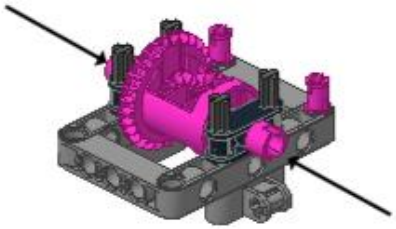

©jokey02

3

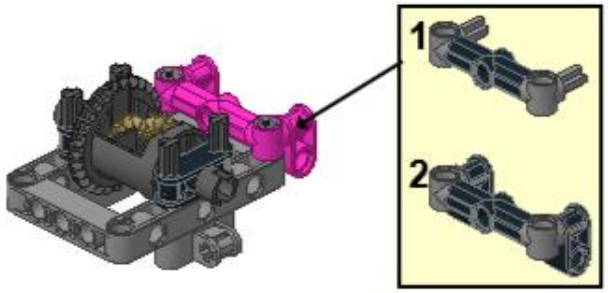

4

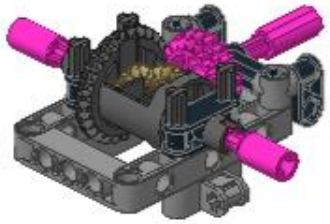

©jokey02

5

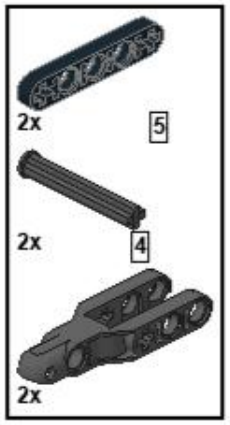

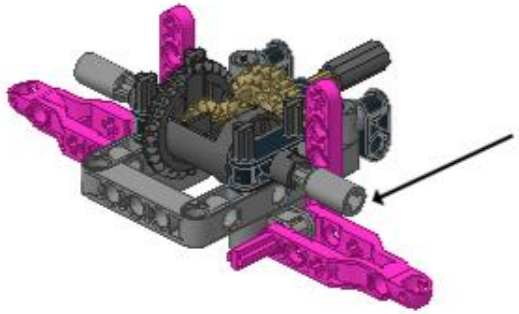

©jokey02

6

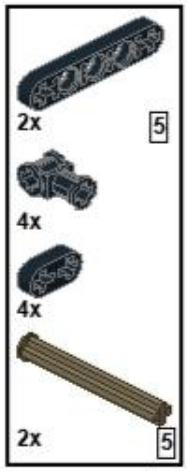

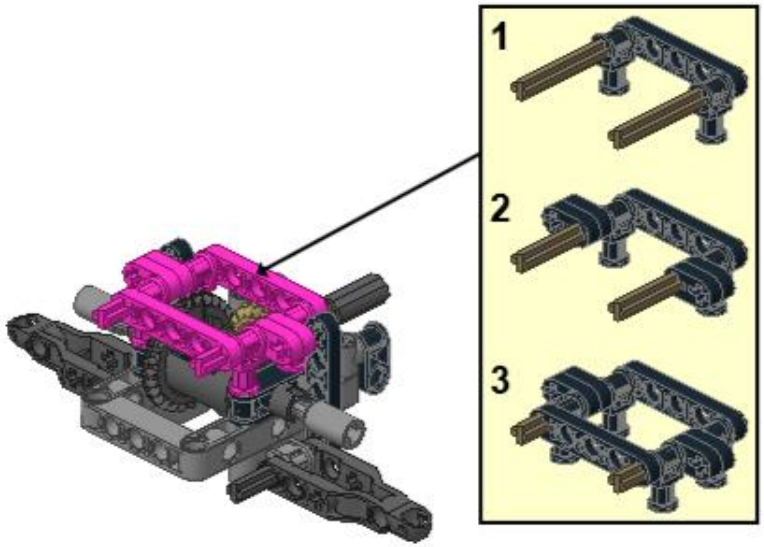

7

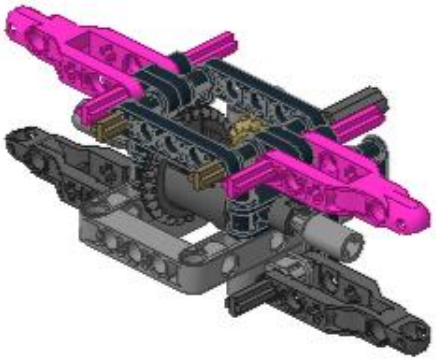

©jokey02

8

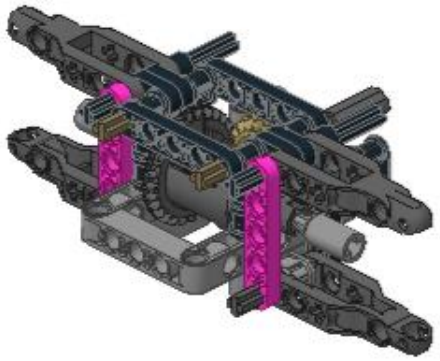

©jokey02

9

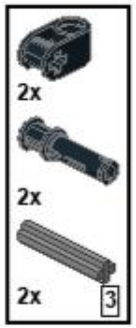

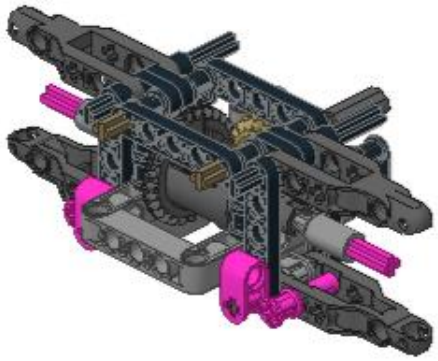

©jokey02

10

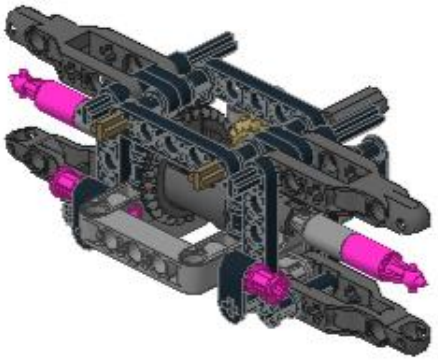

©jokey02

11

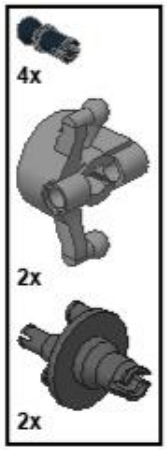

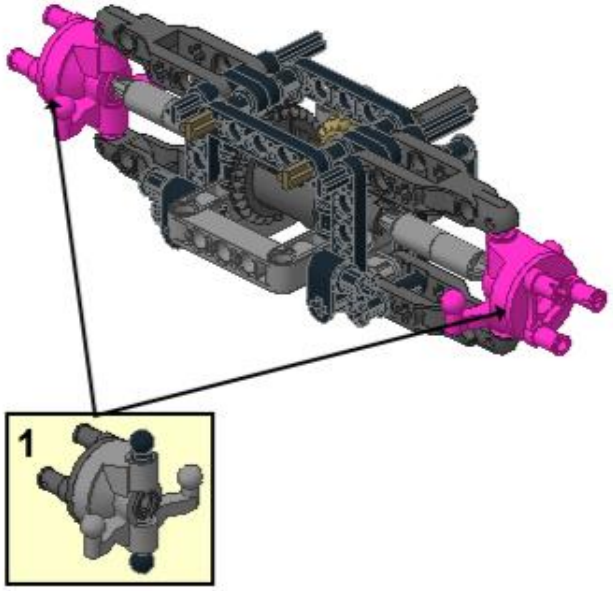

x2

12

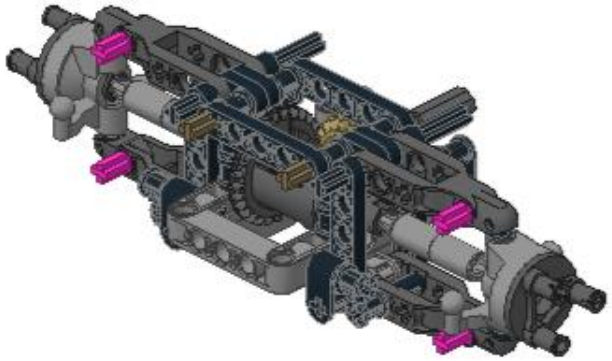

©jokey02

13

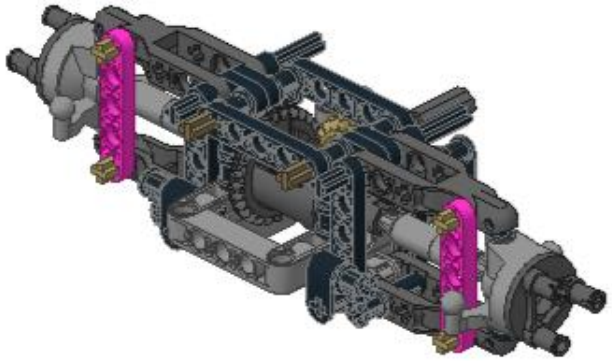

©jokey02

14

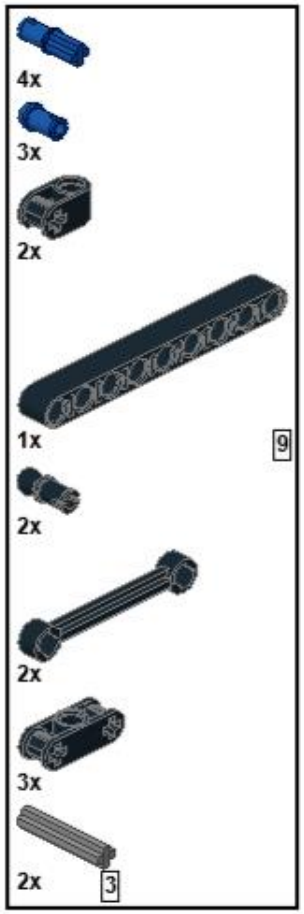

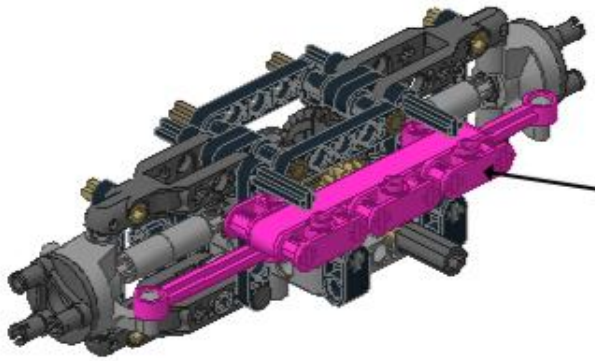

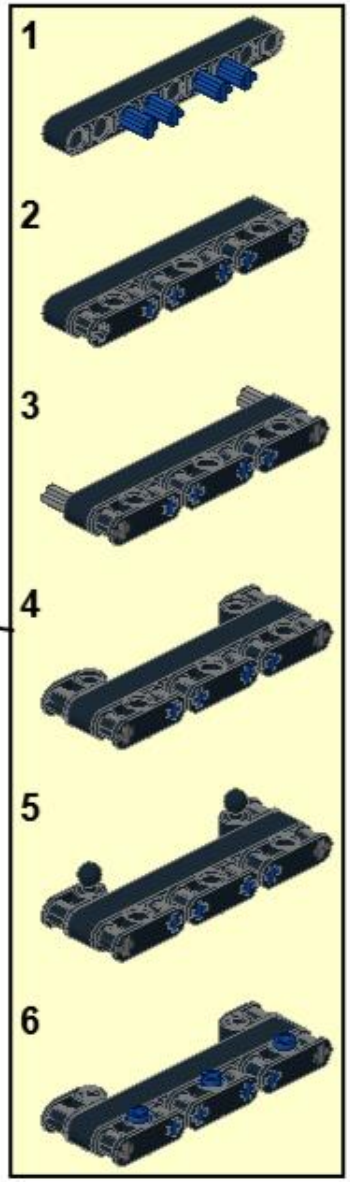

©jokey02

15

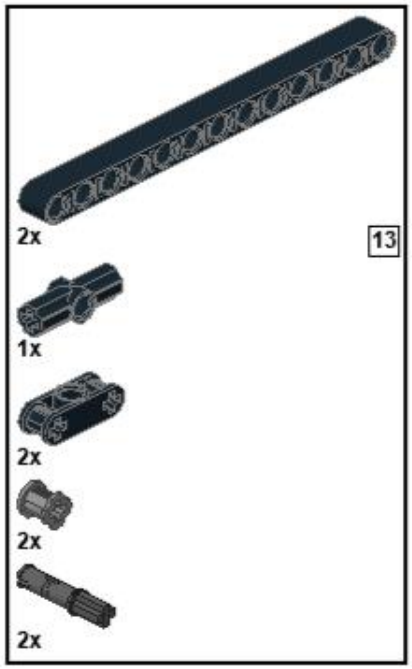

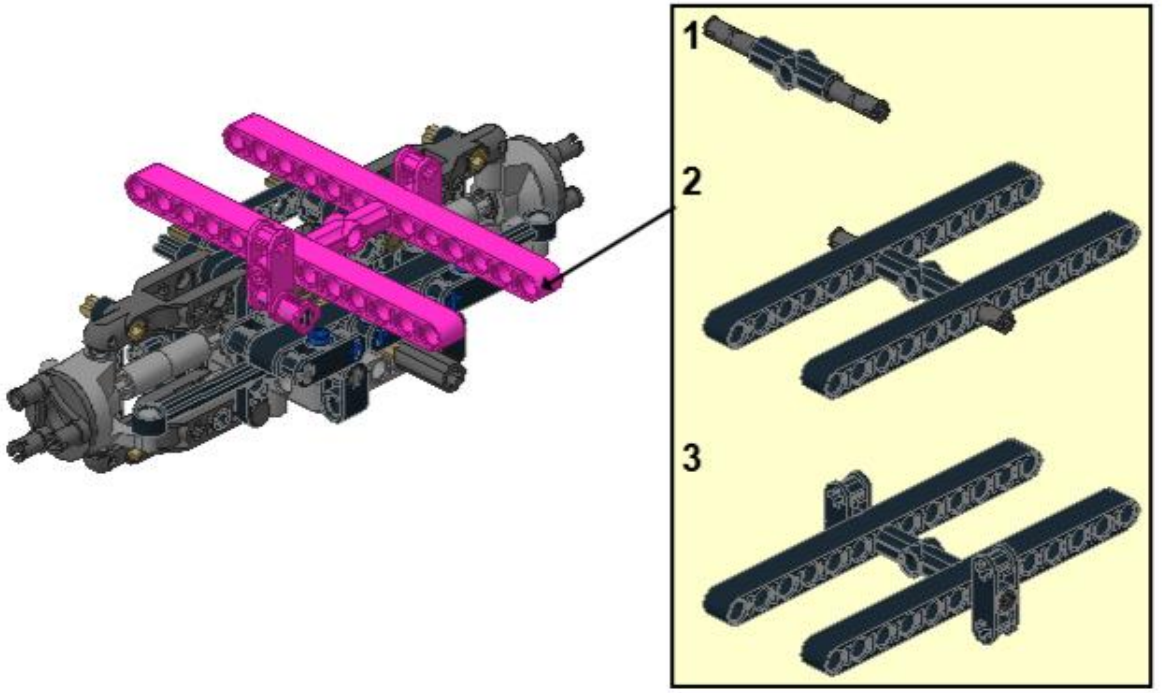

16

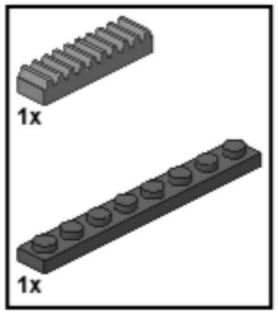

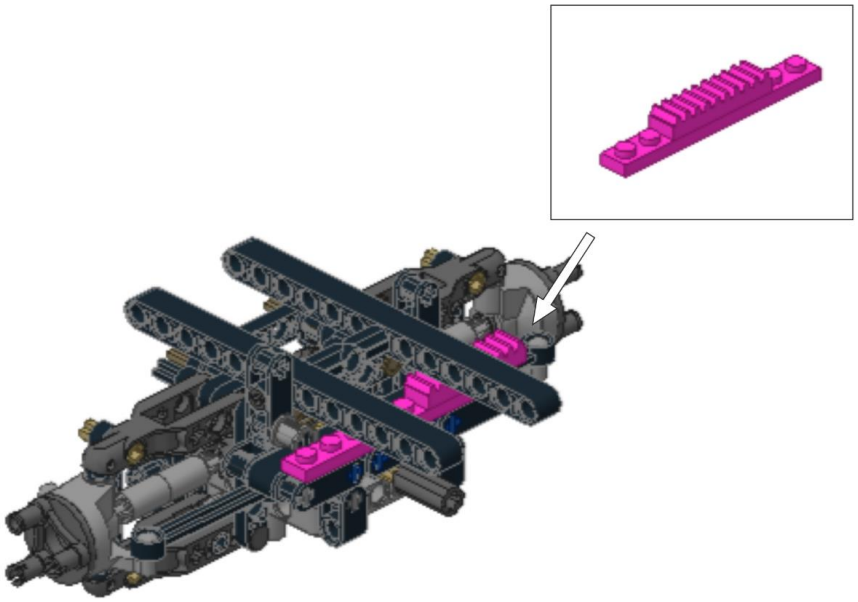

©jokey02

17

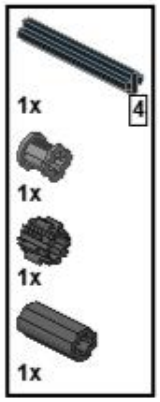

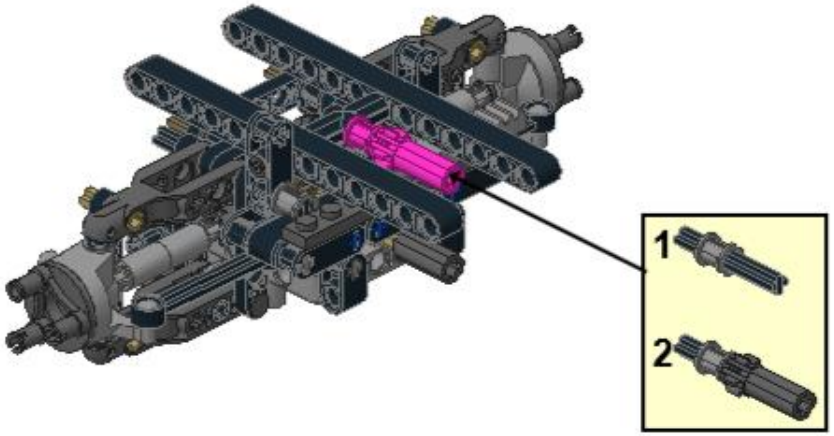

18

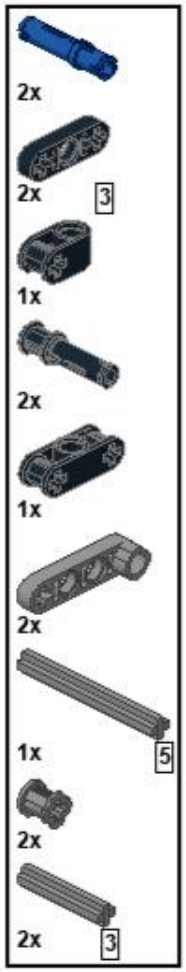

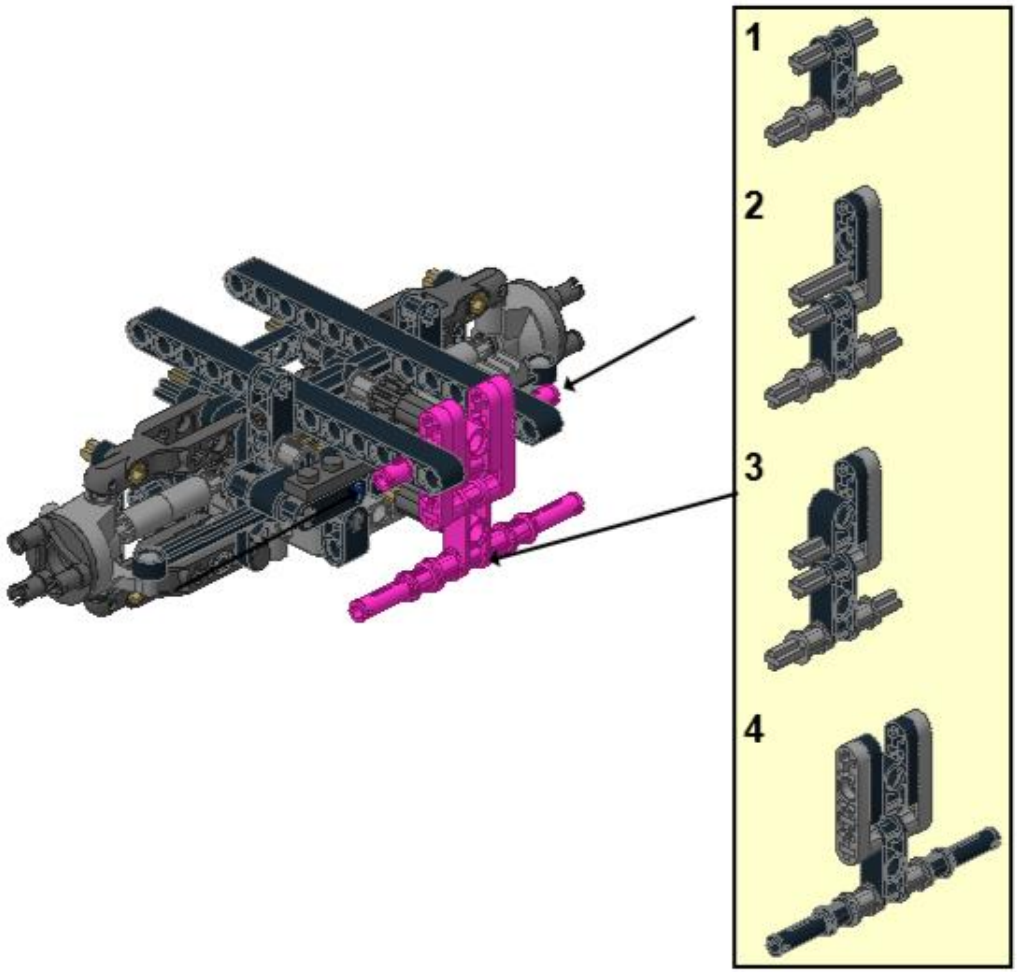

19

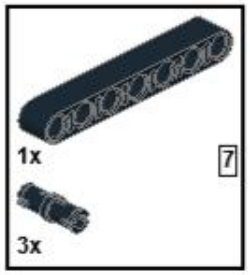

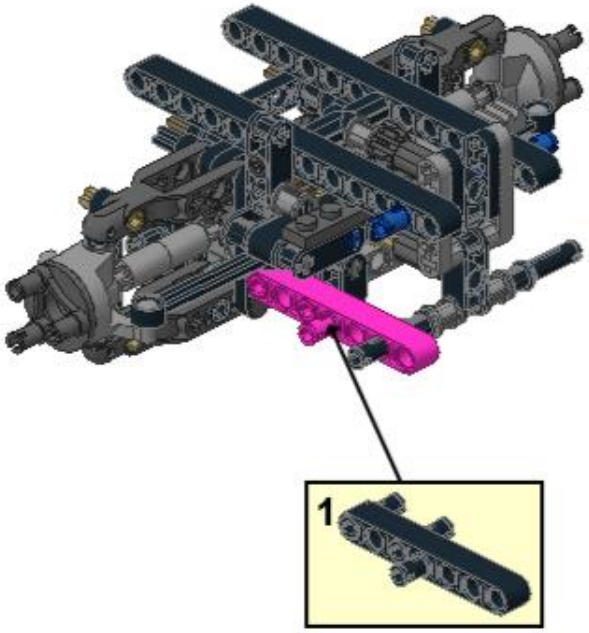

20

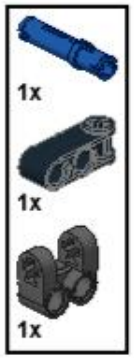

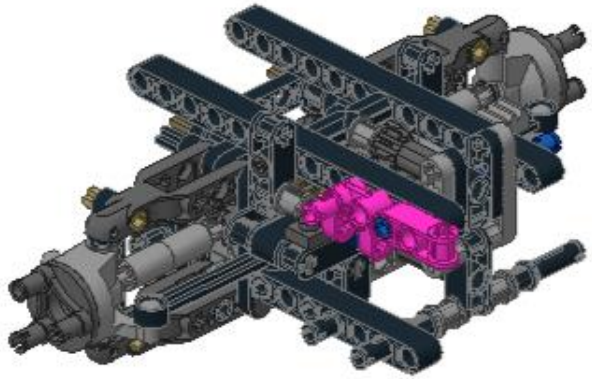

21

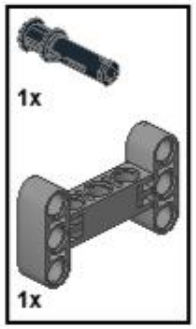

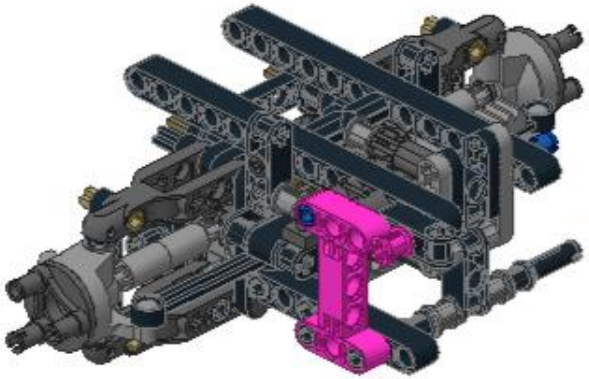

©jokey02

22

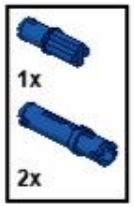

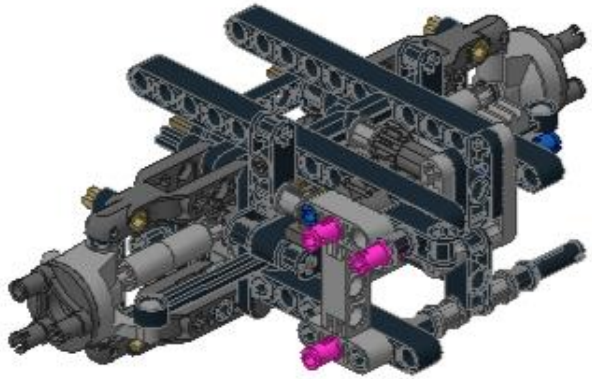

©jokey02

23

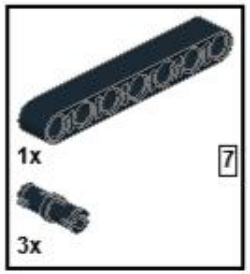

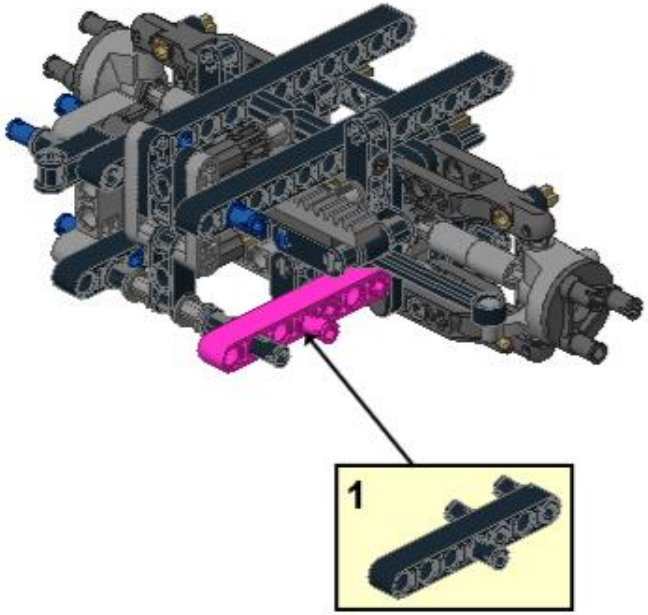

24

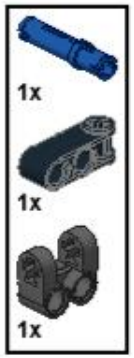

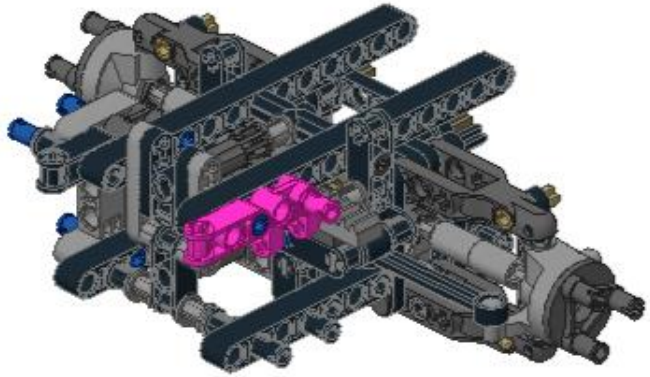

25

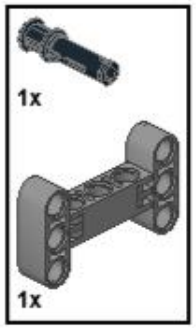

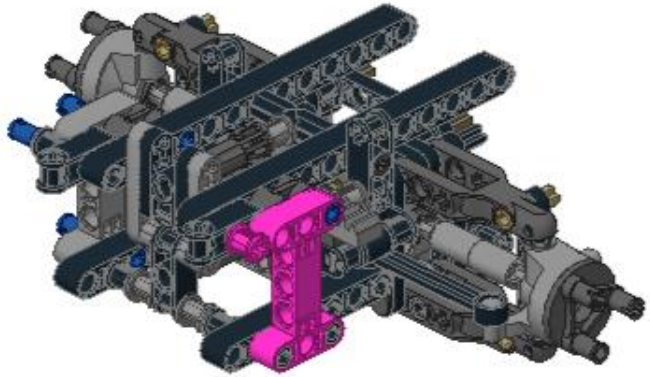

©jokey02

26

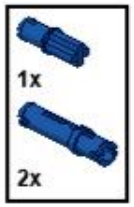

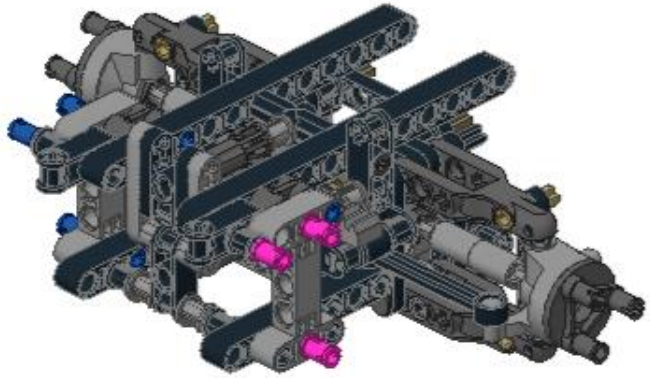

©jokey02

1

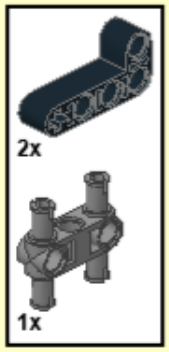

2

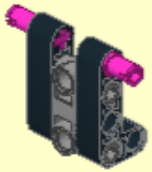

3

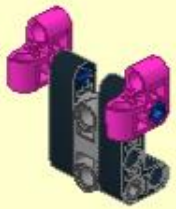

4

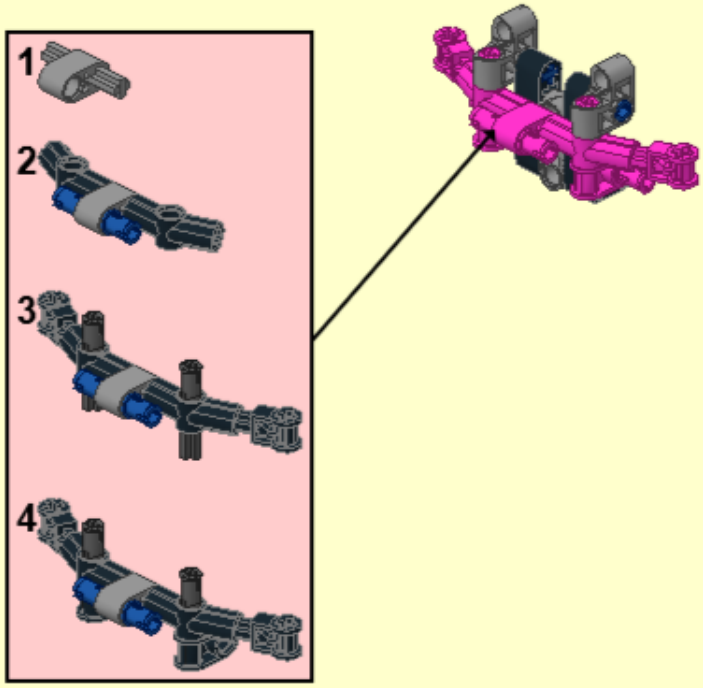

5

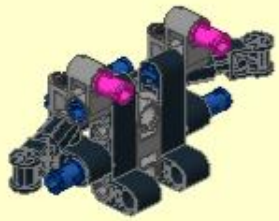

6

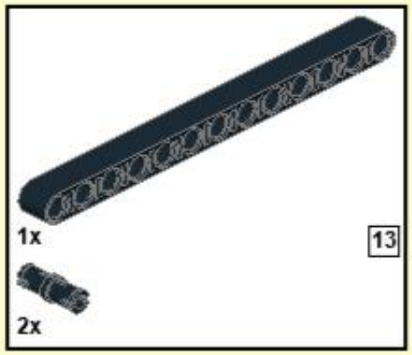

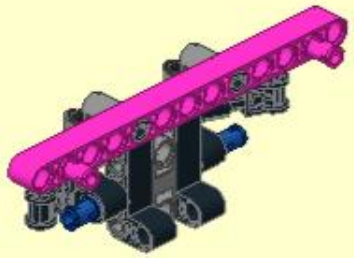

7

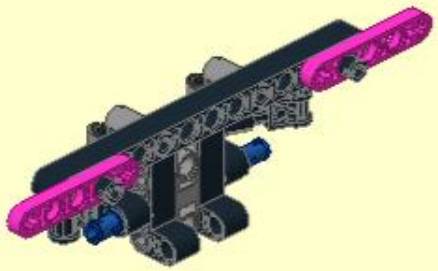

8

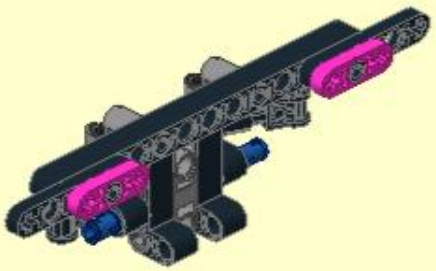

27

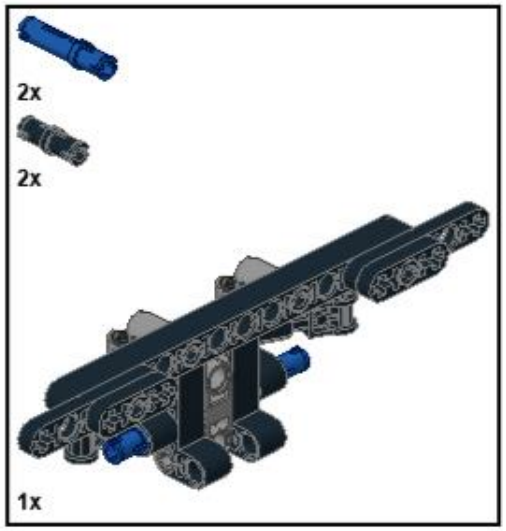

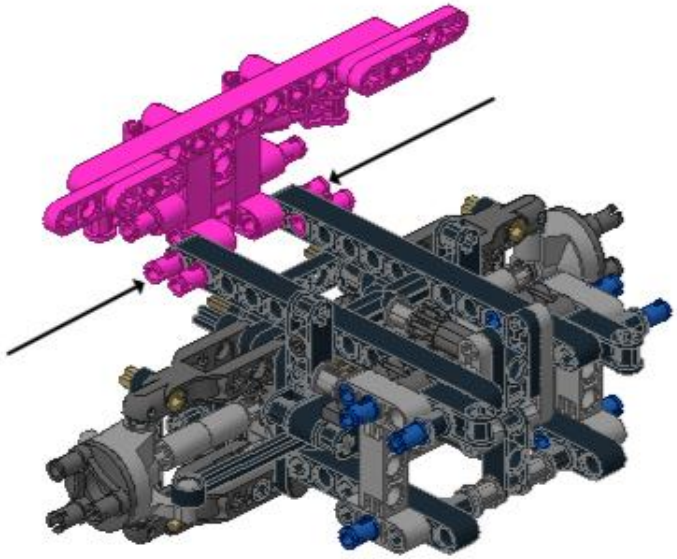

28

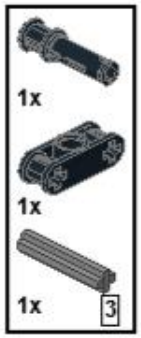

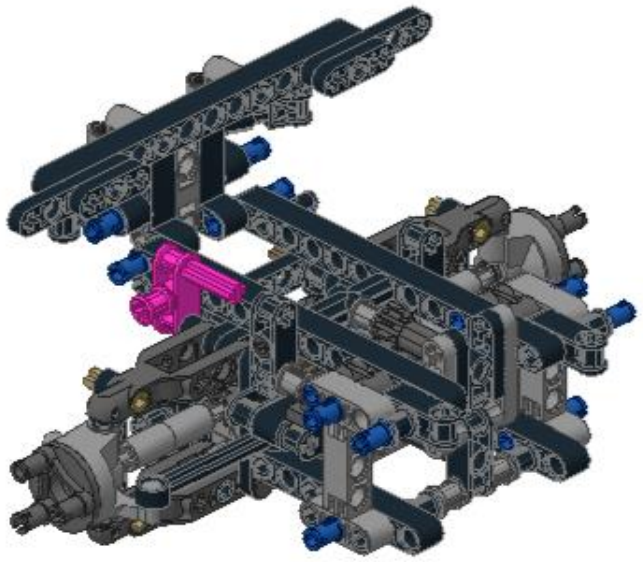

29

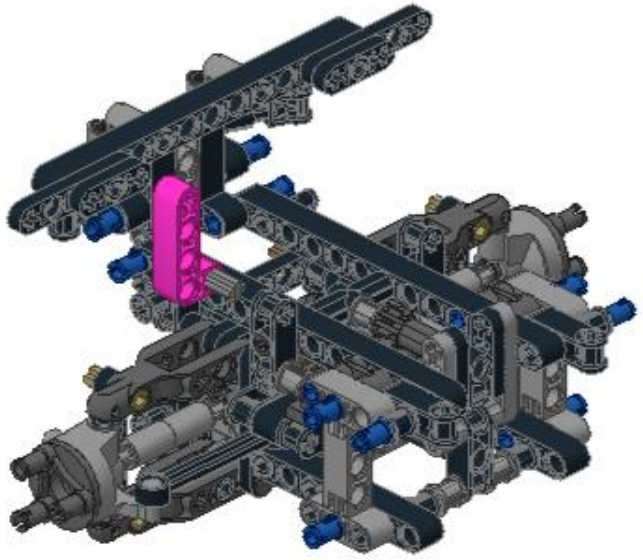

©jokey02

30

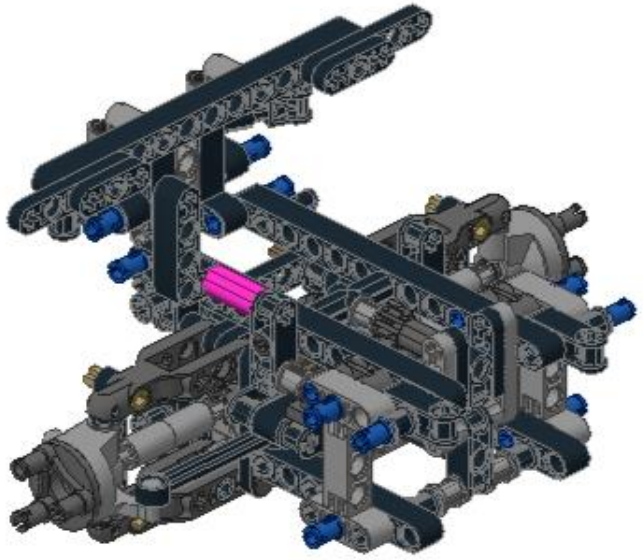

©jokey02

31

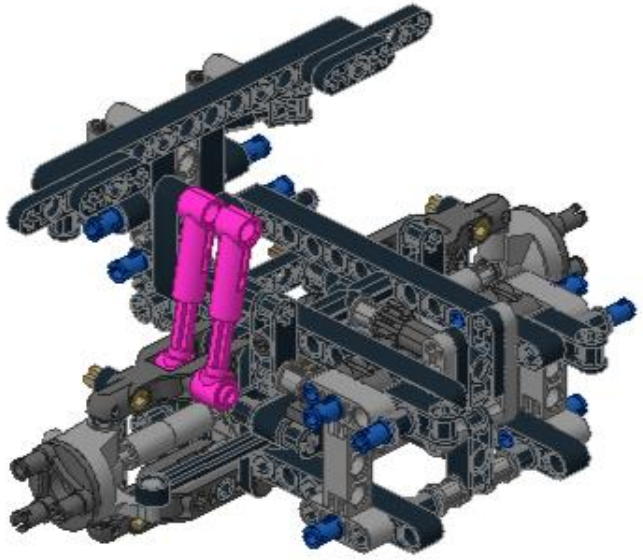

32

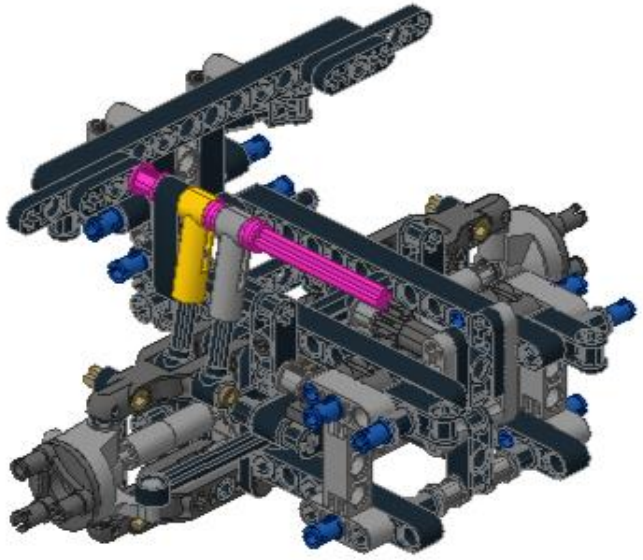

©jokey02

33

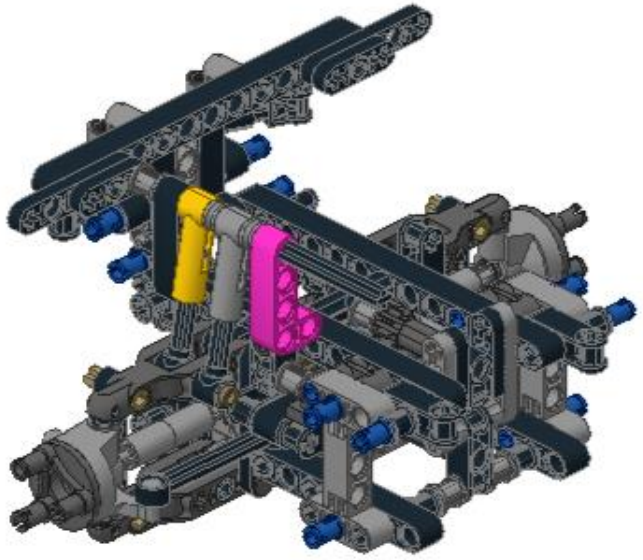

©jokey02

34

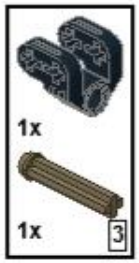

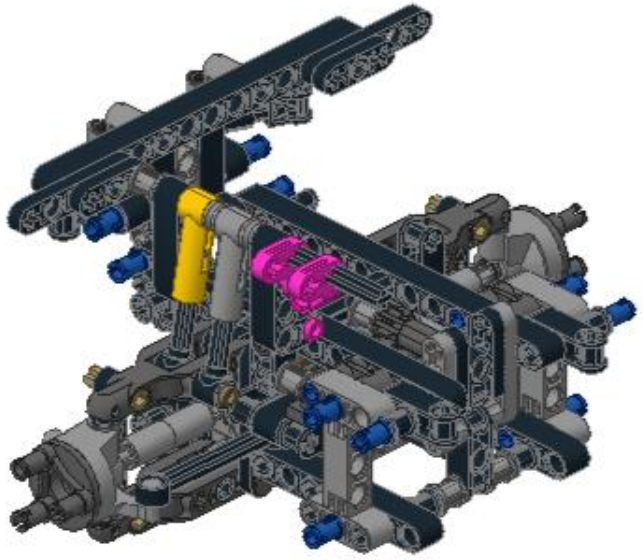

35

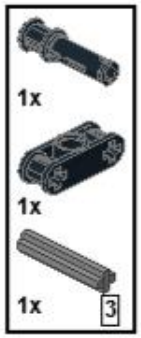

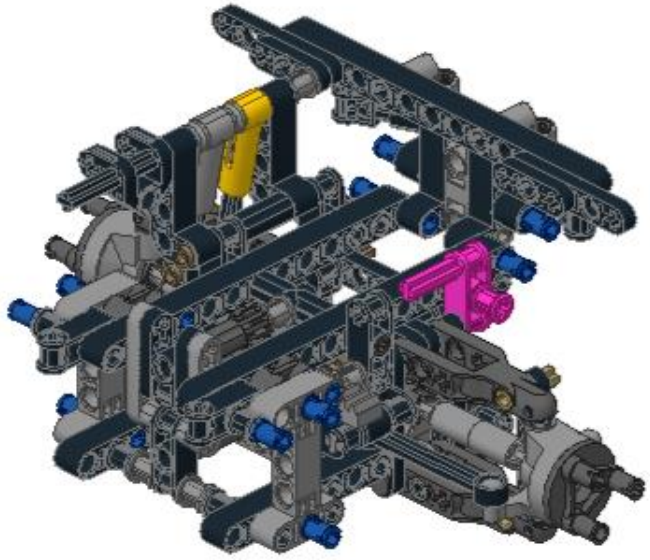

©jokey02

36

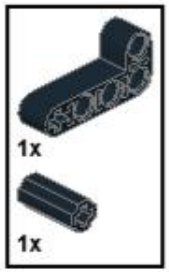

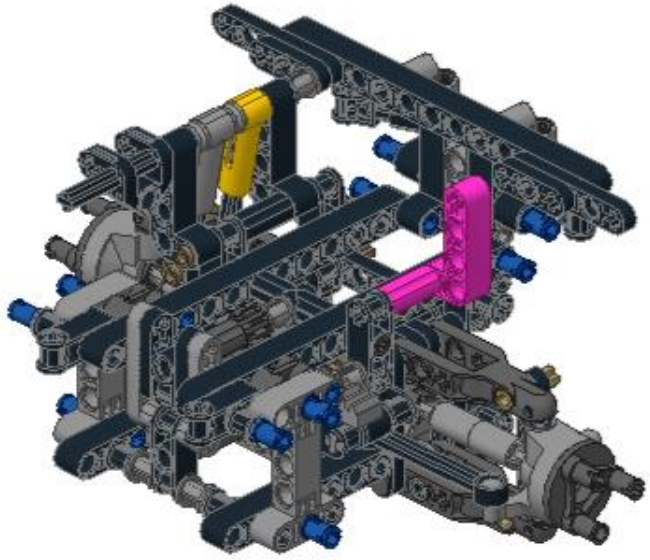

©jokey02

37

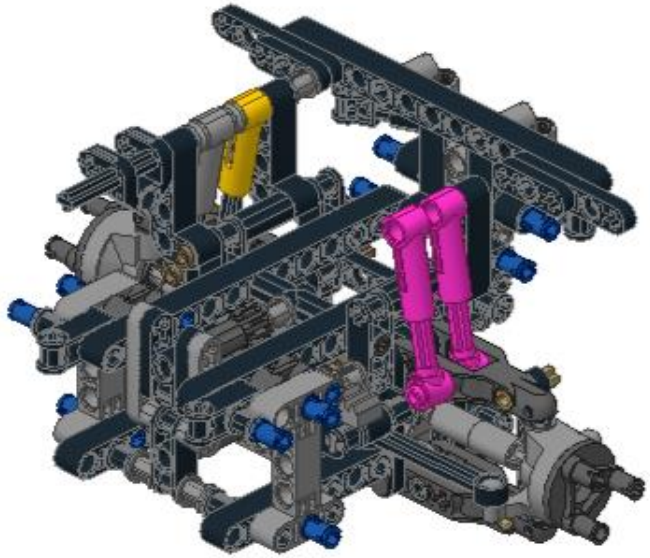

©jokey02

38

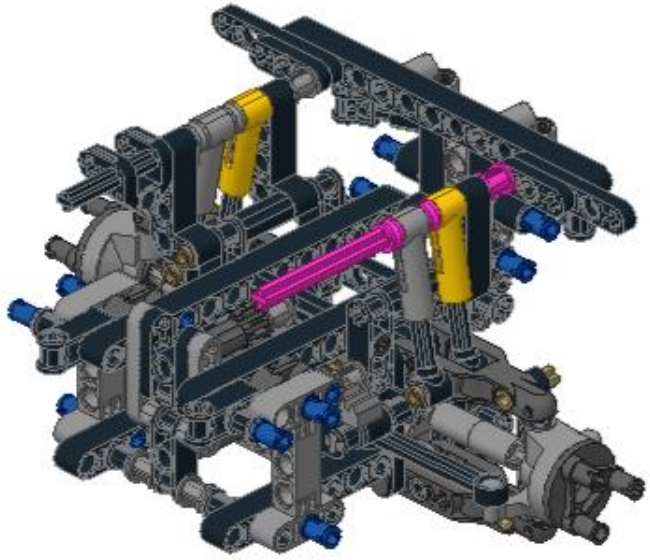

©jokey02

39

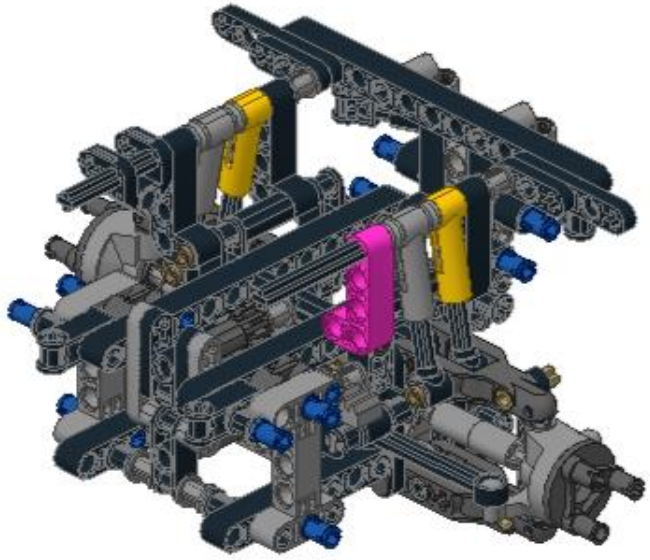

©jokey02

40

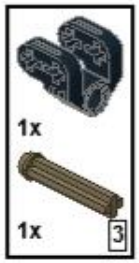

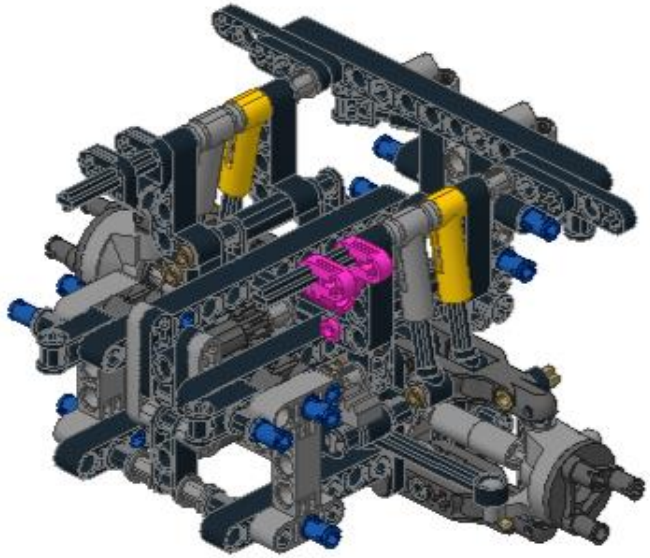

1

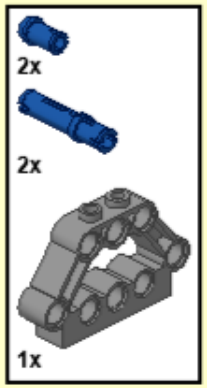

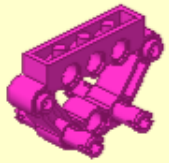

2

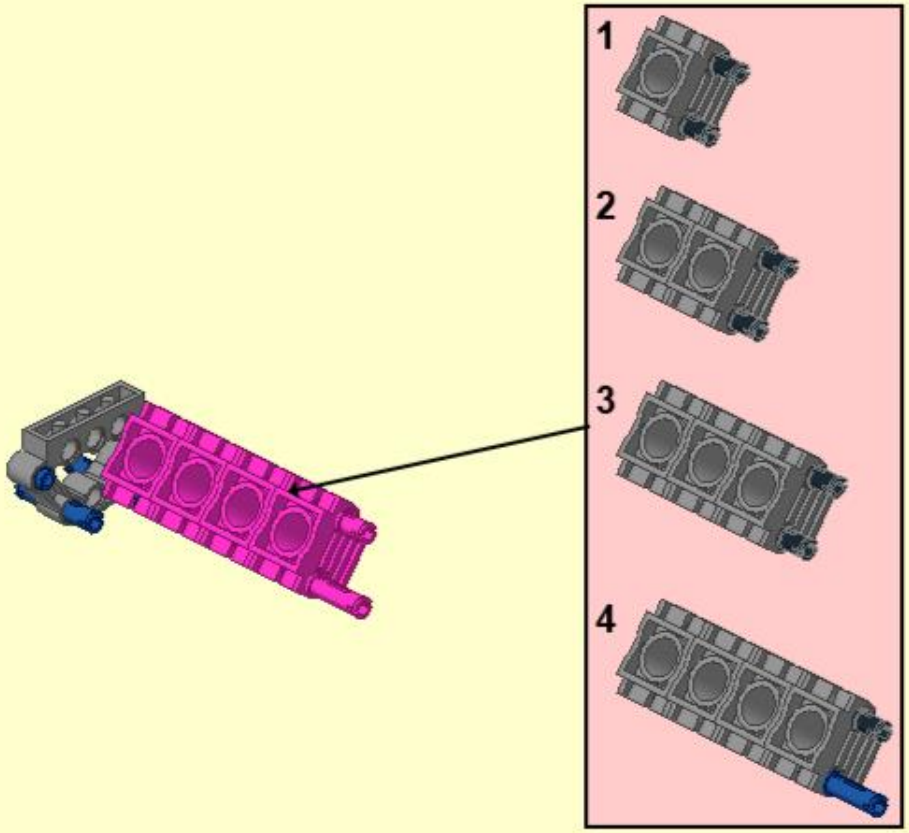

3

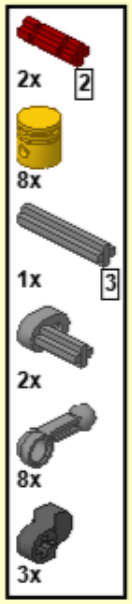

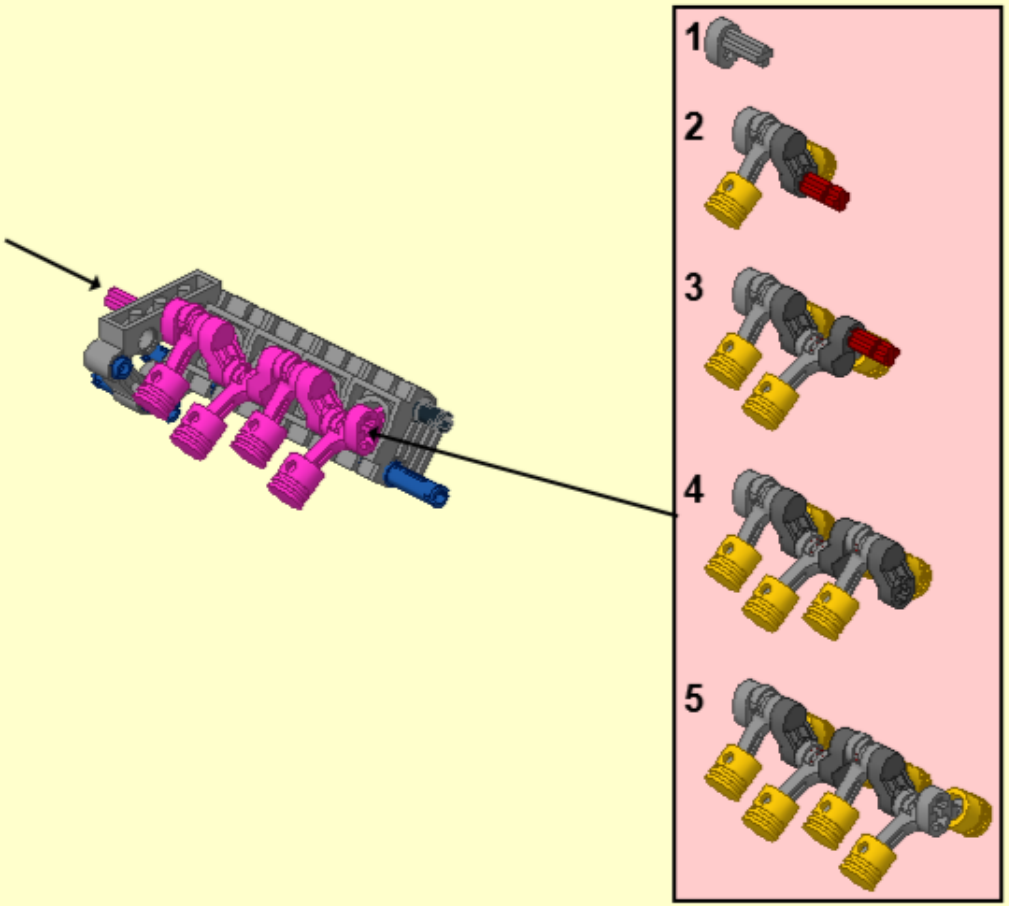

4

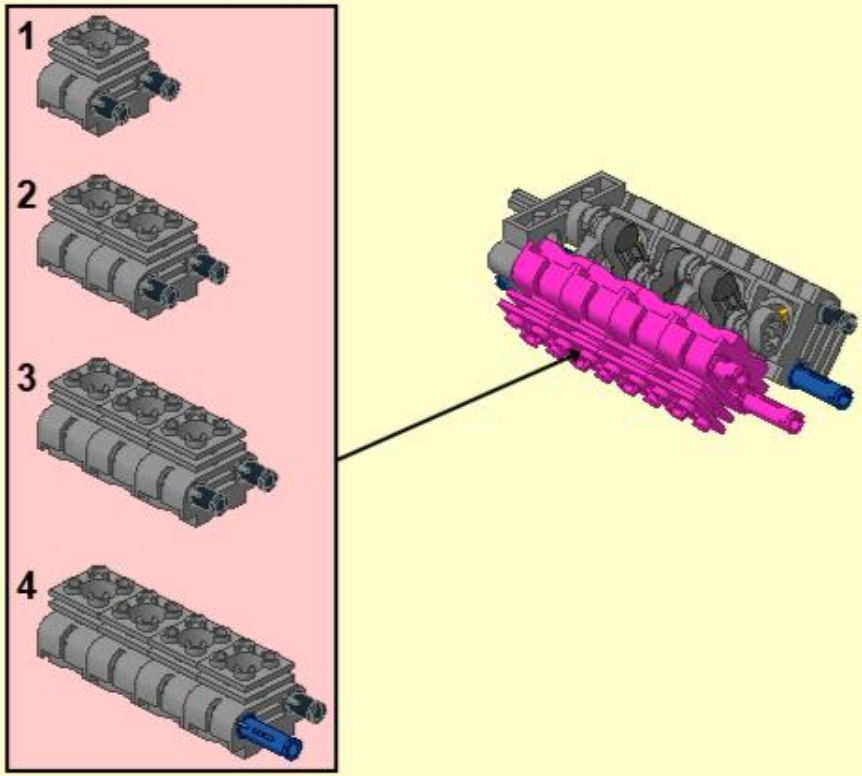

5

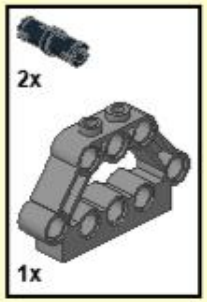

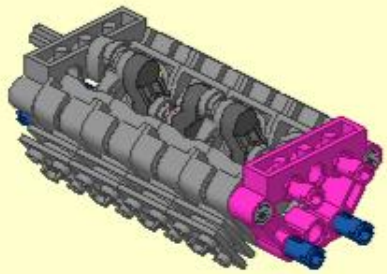

6

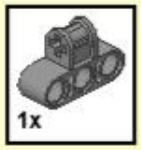

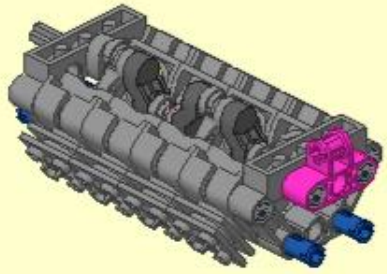

7

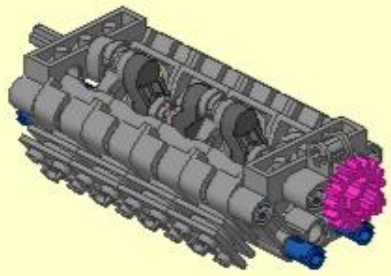

8

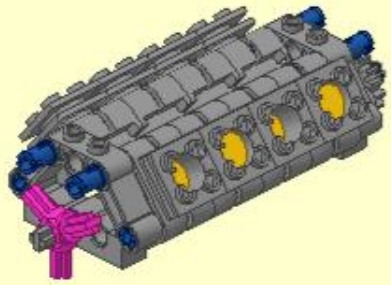

41

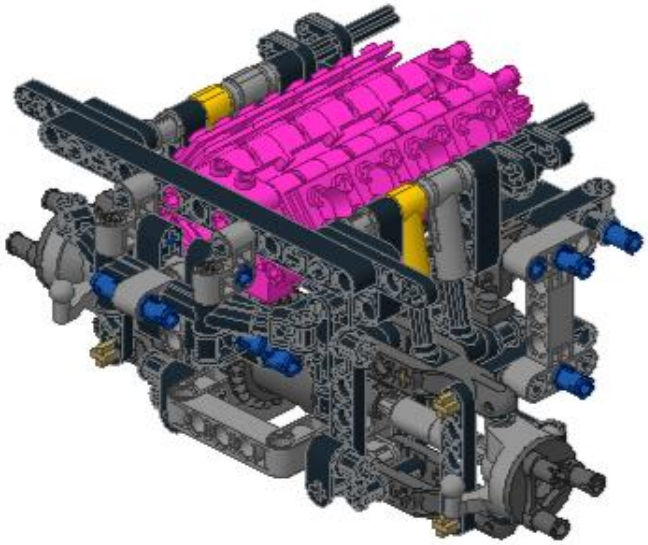

42

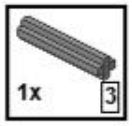

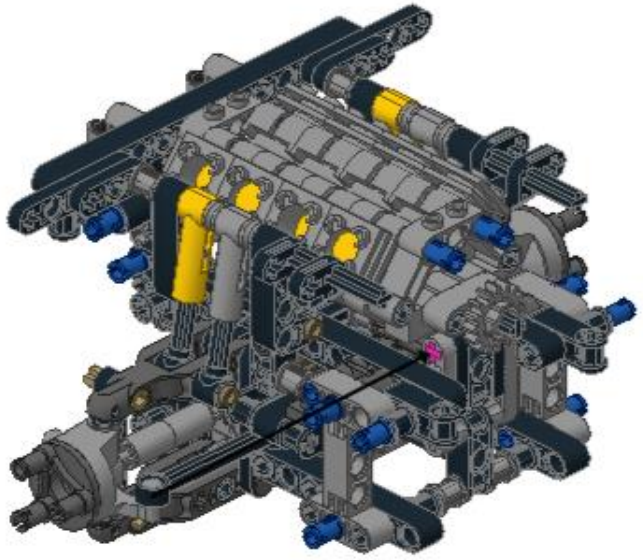

©jokey02

43

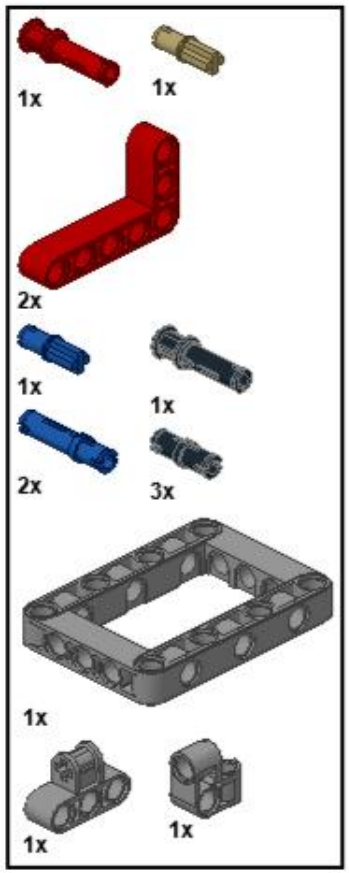

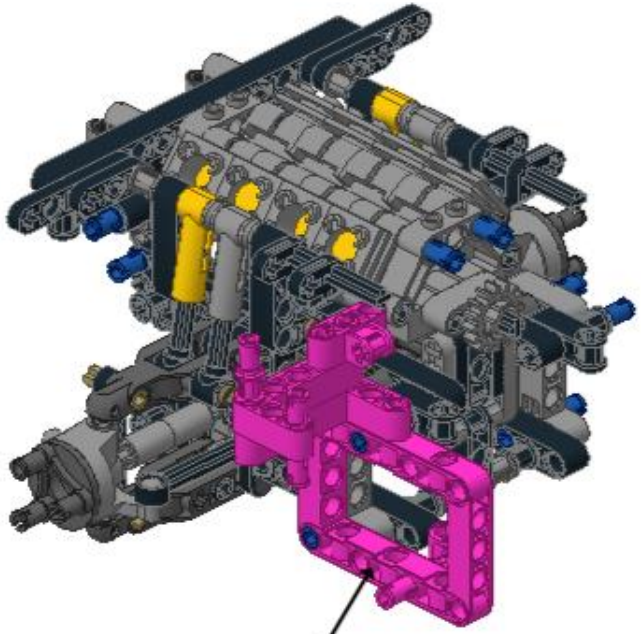

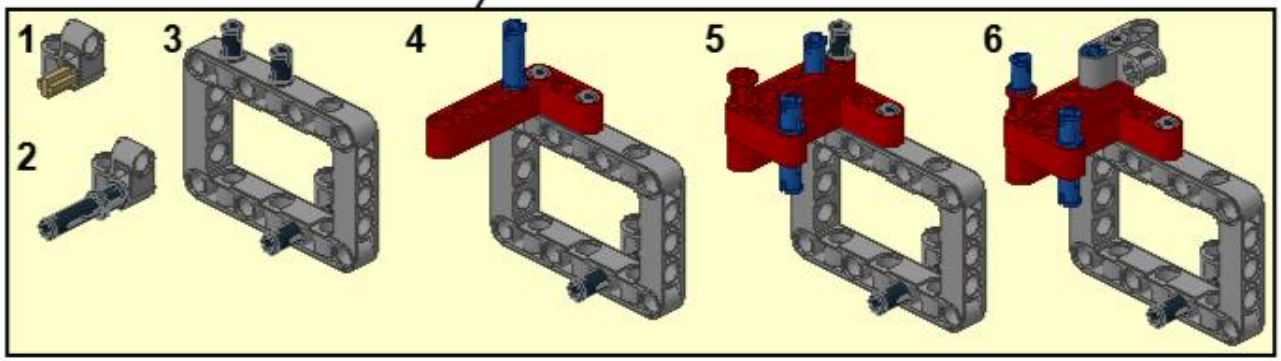

44

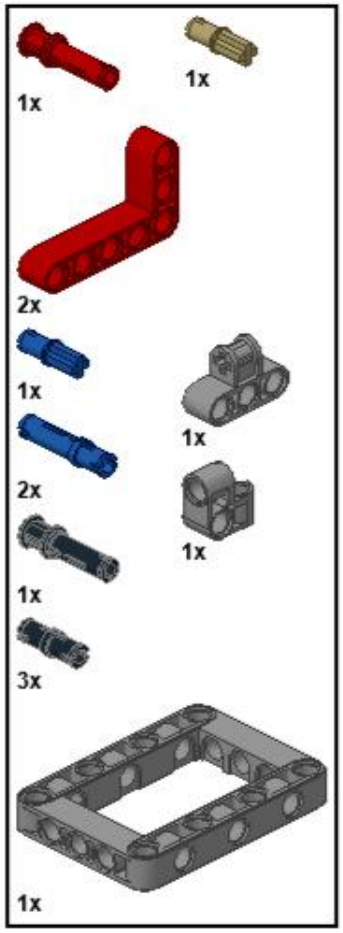

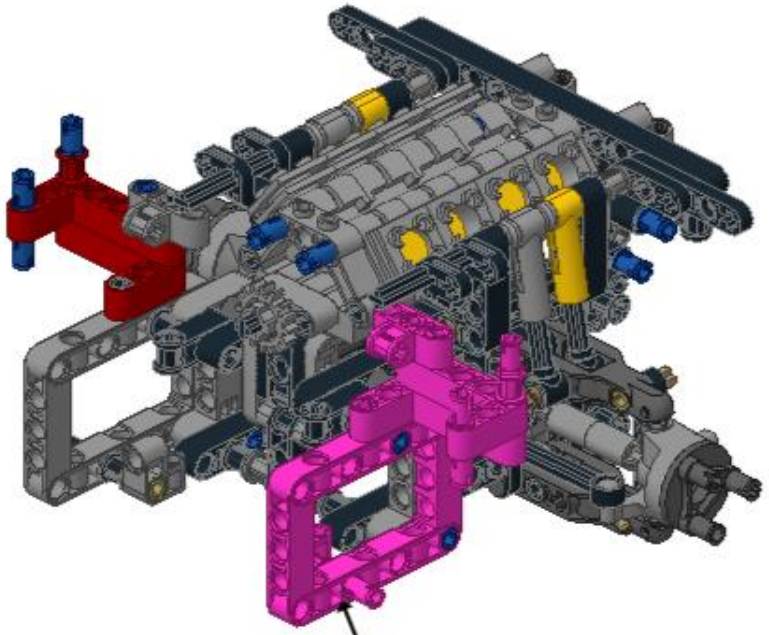

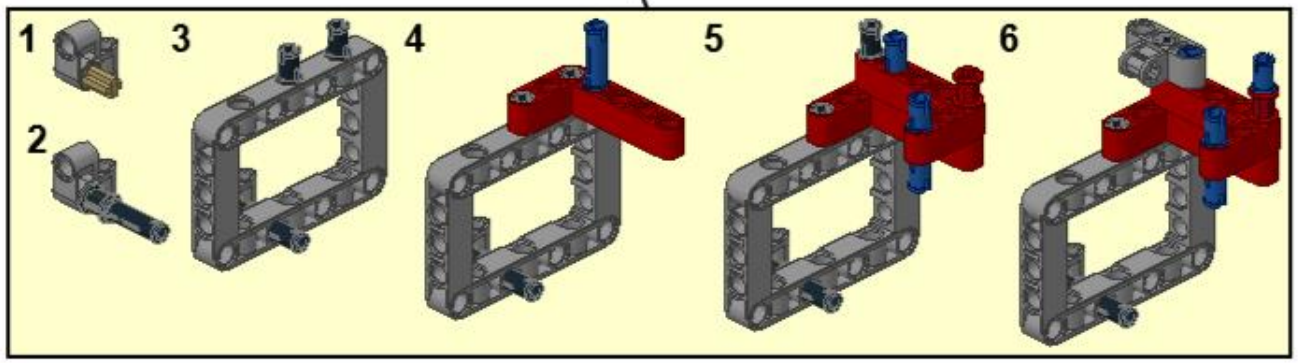

45

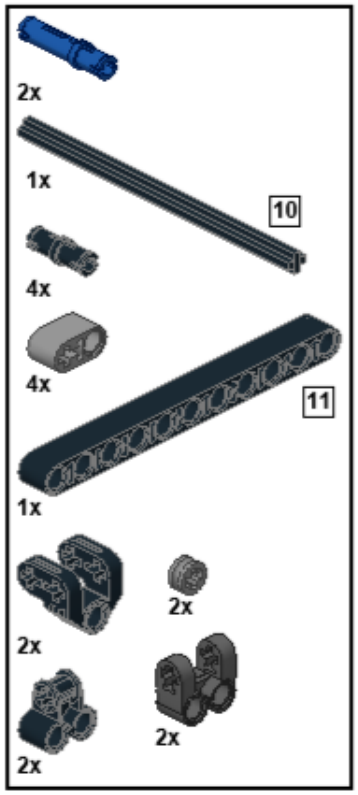

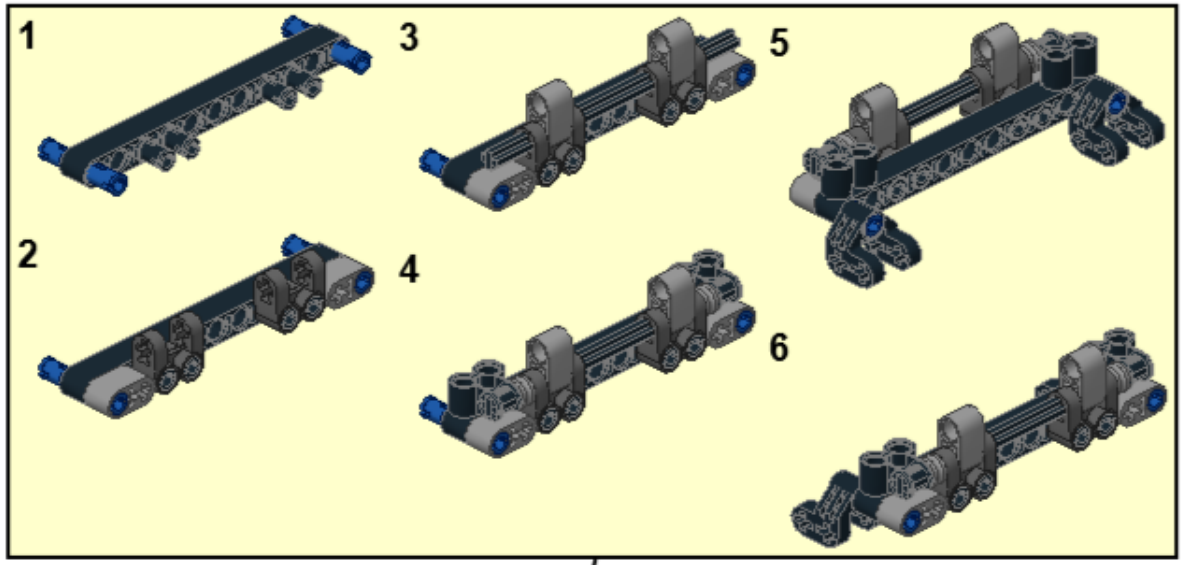

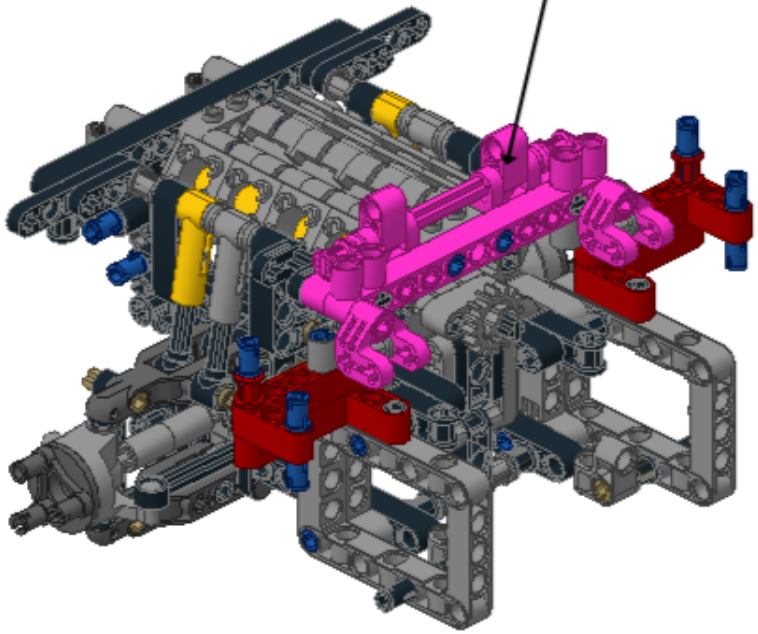

46

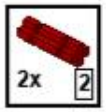

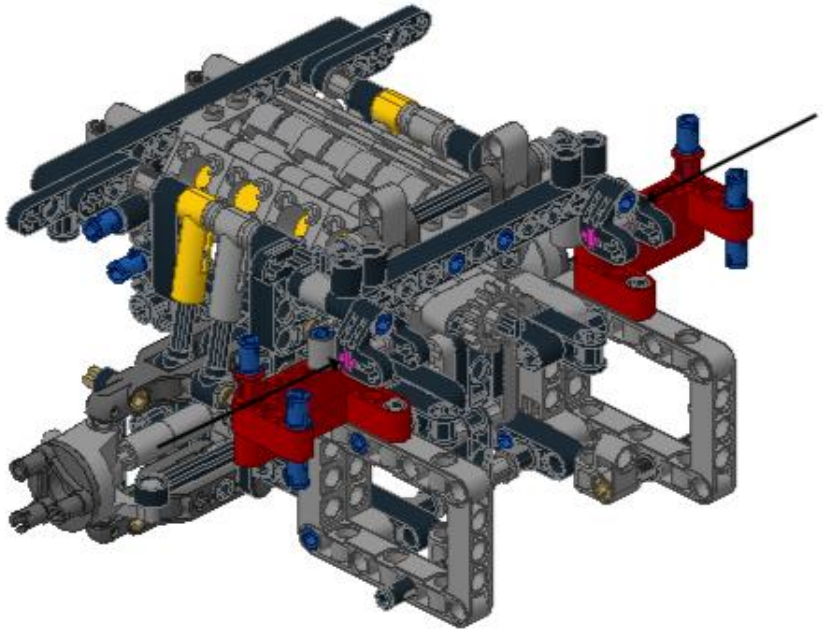

©jokey02

47

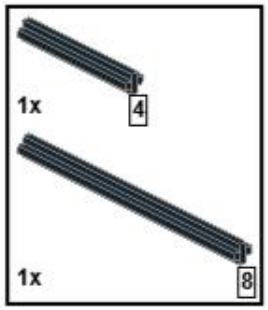

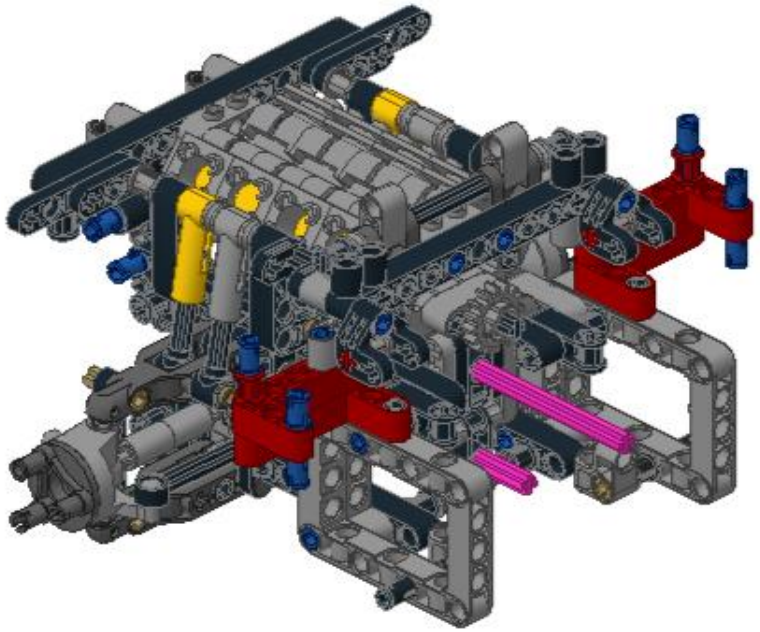

48

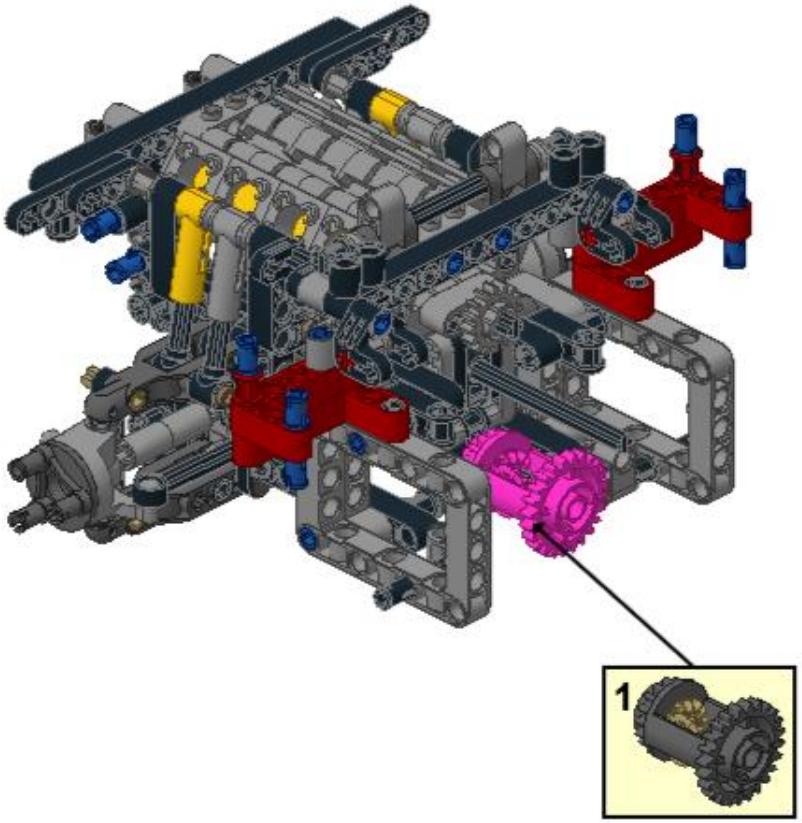

49

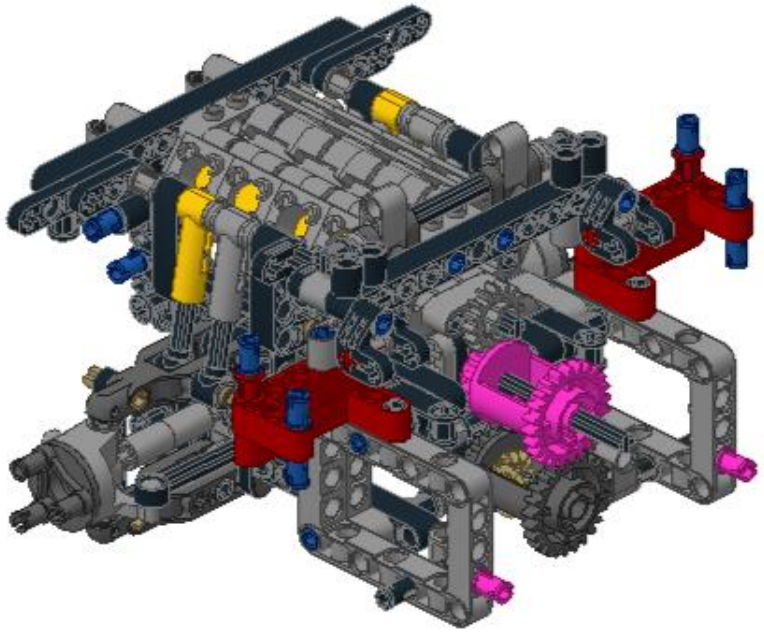

©jokey02

1

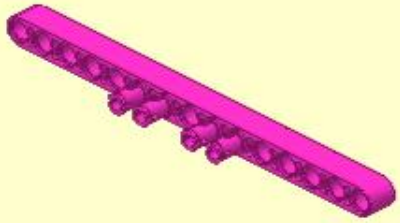

2

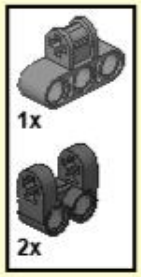

3

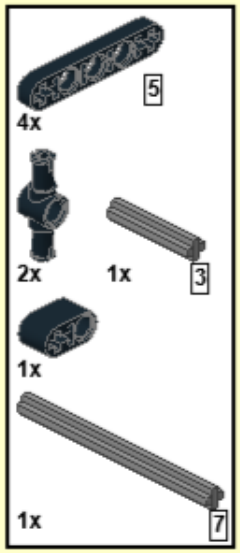

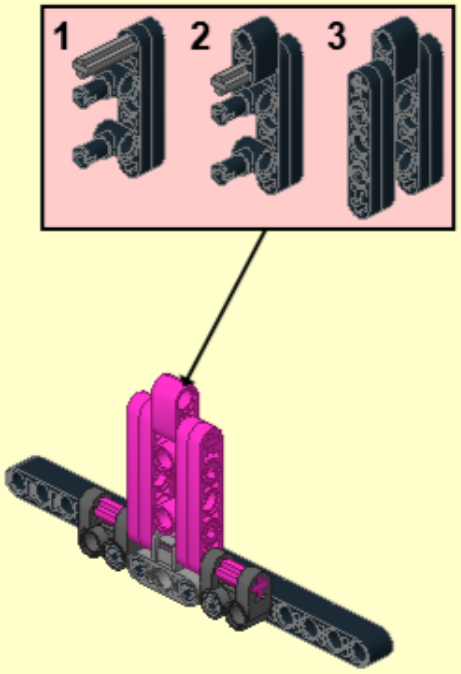

4

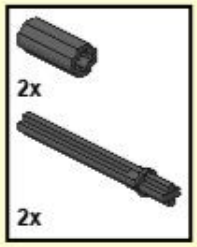

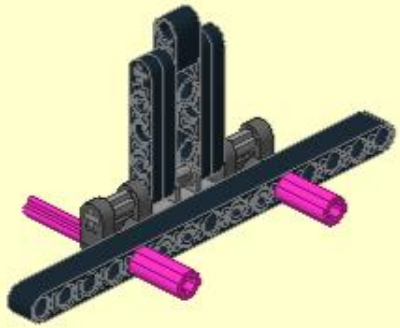

5

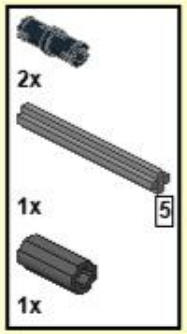

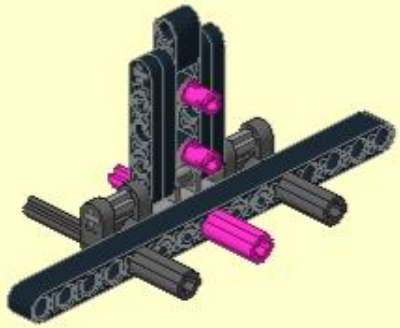

6

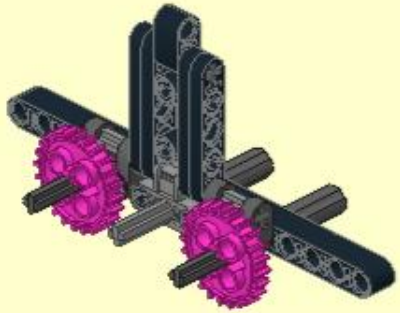

7

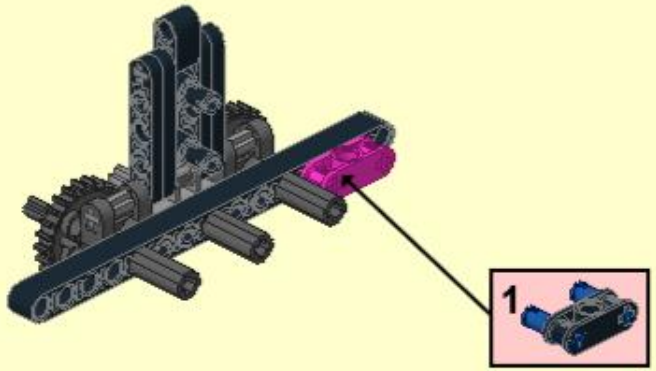

8

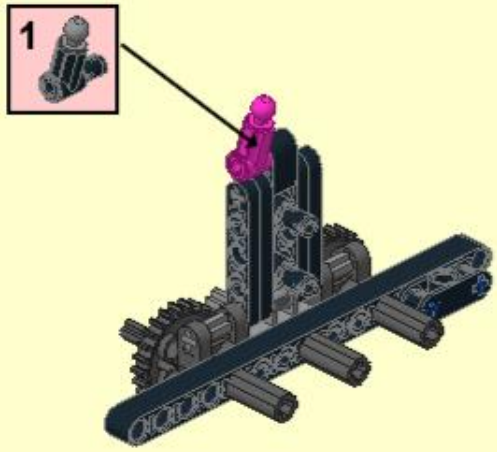

50

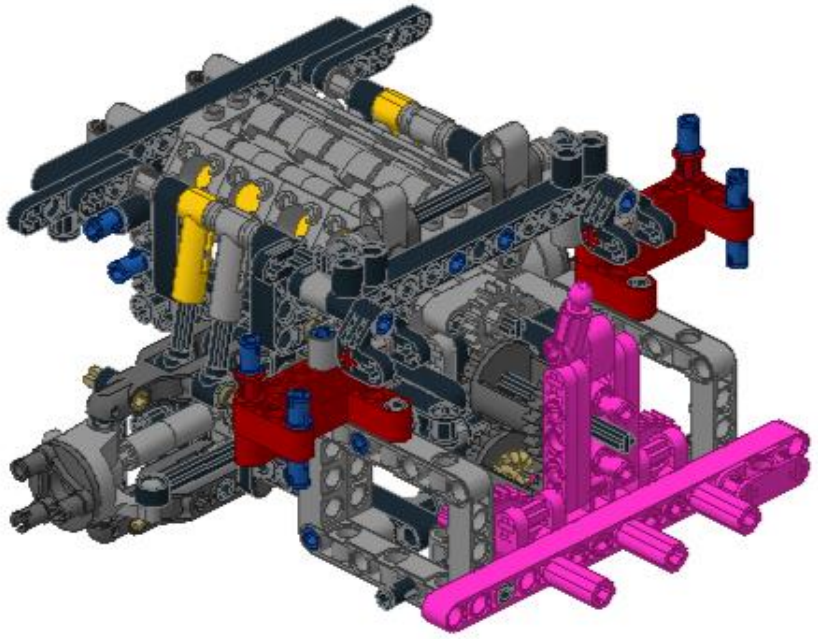

1

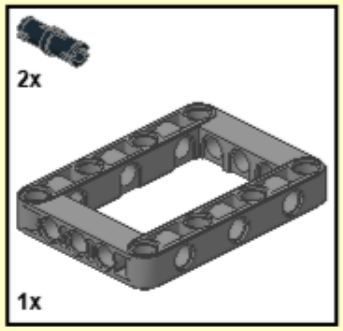

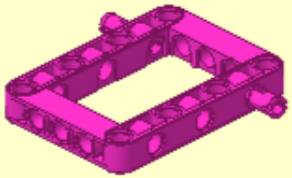

2

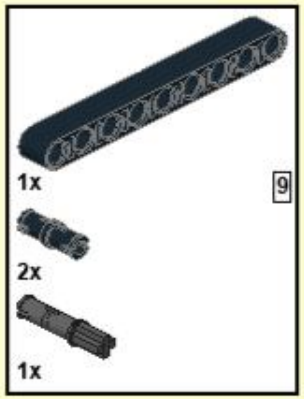

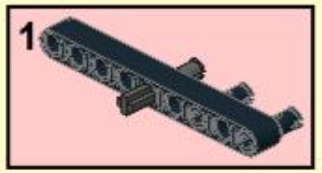

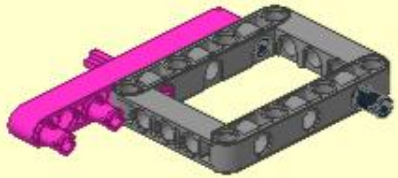

3

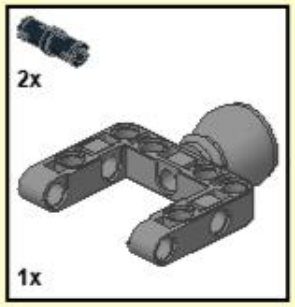

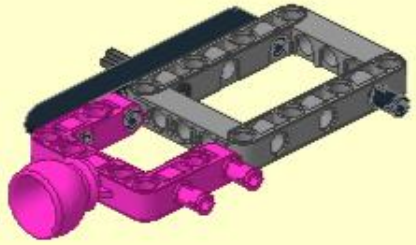

4

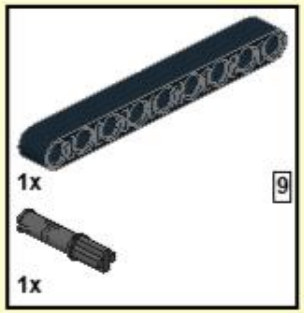

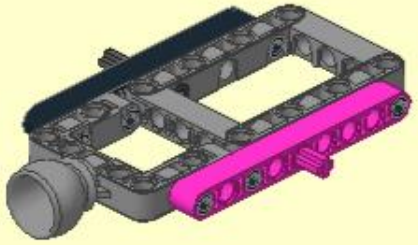

5

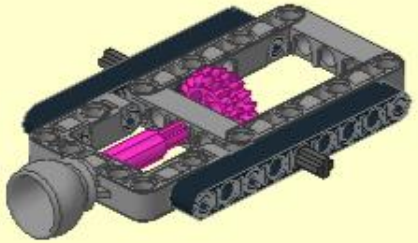

6

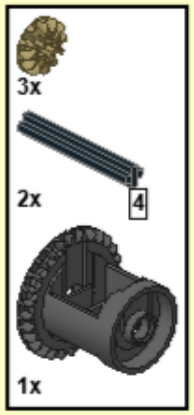

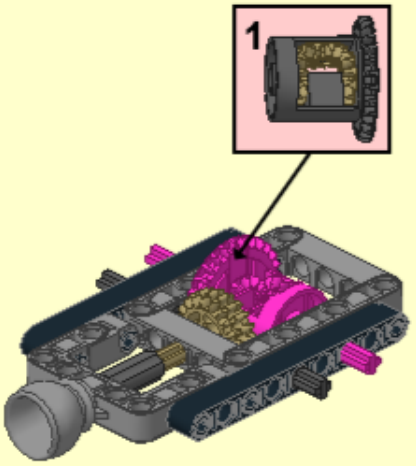

7

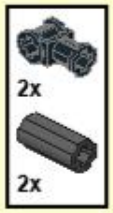

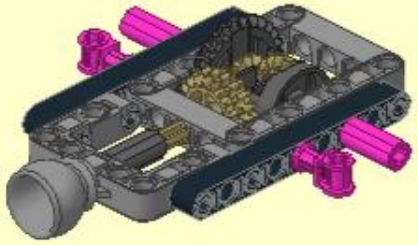

©jokey02

8

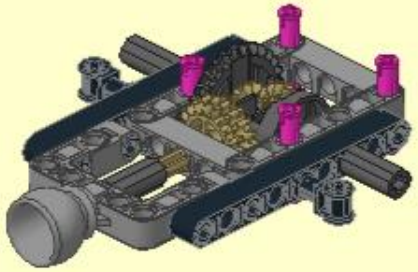

9

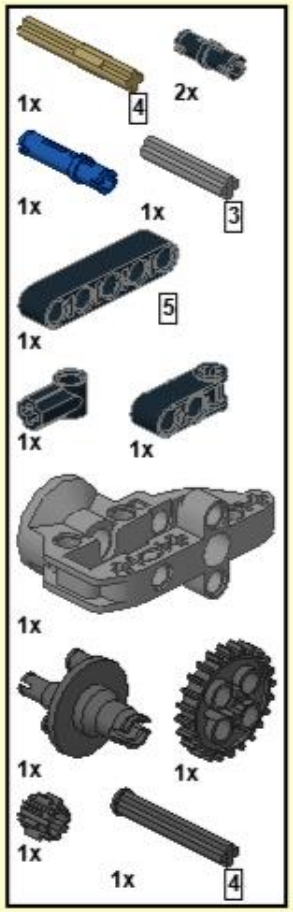

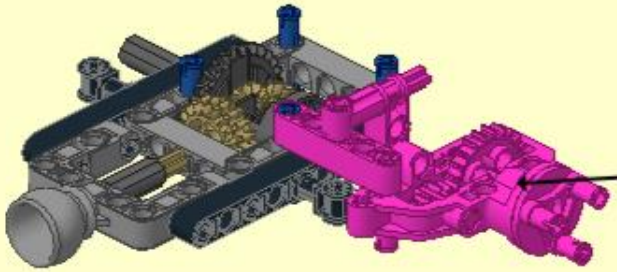

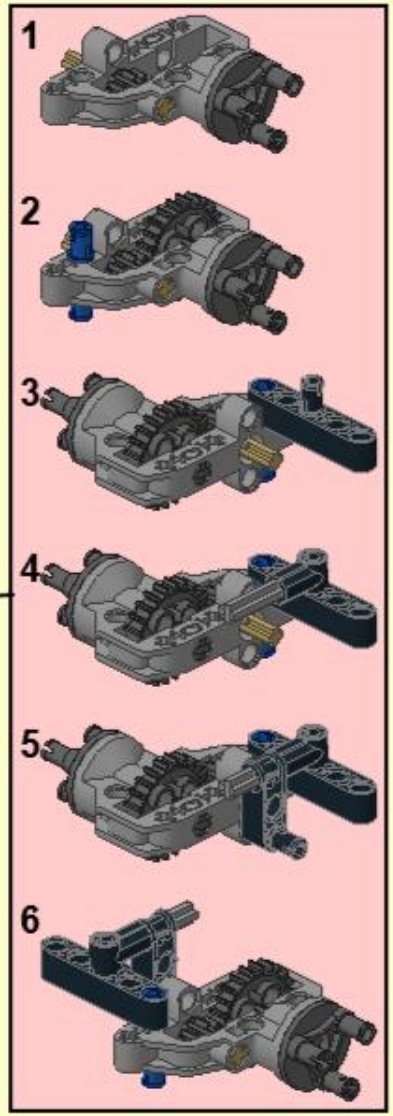

10

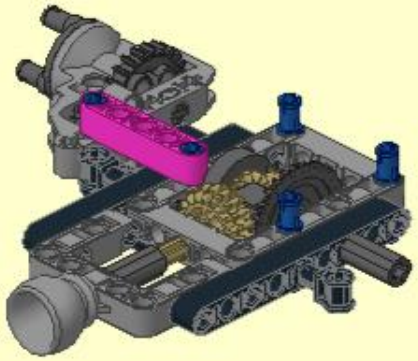

11

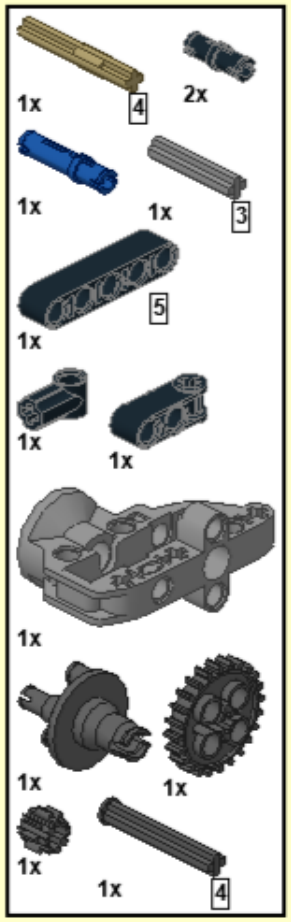

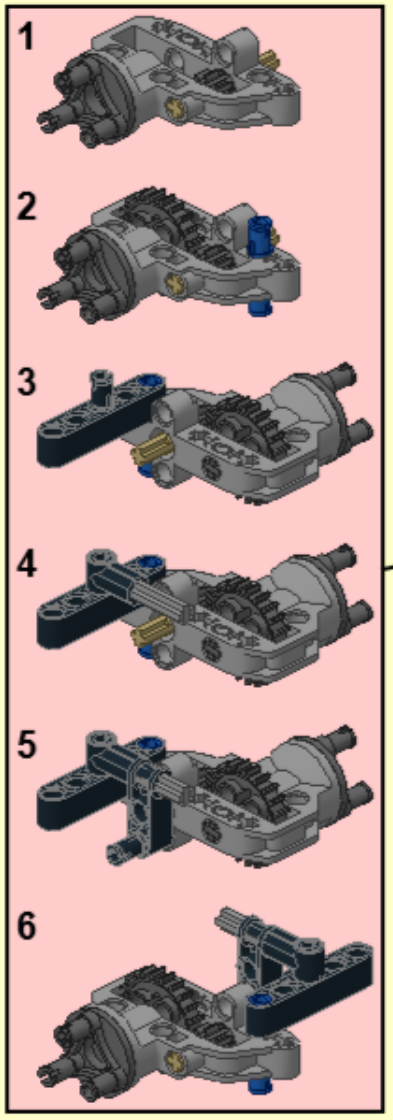

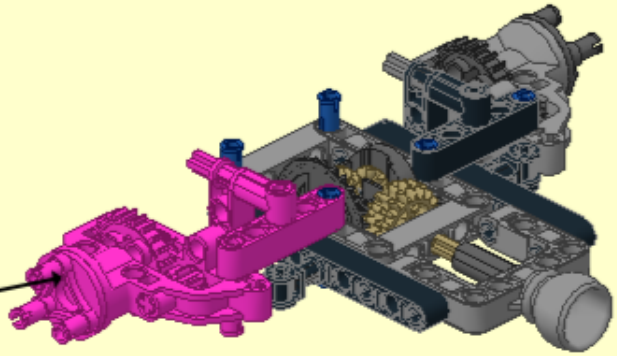

12

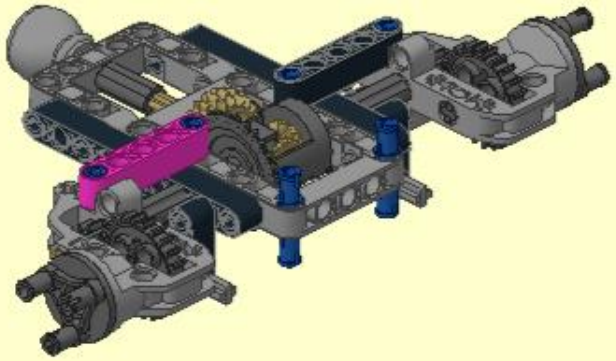

13

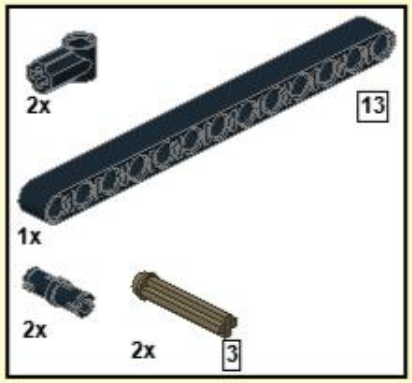

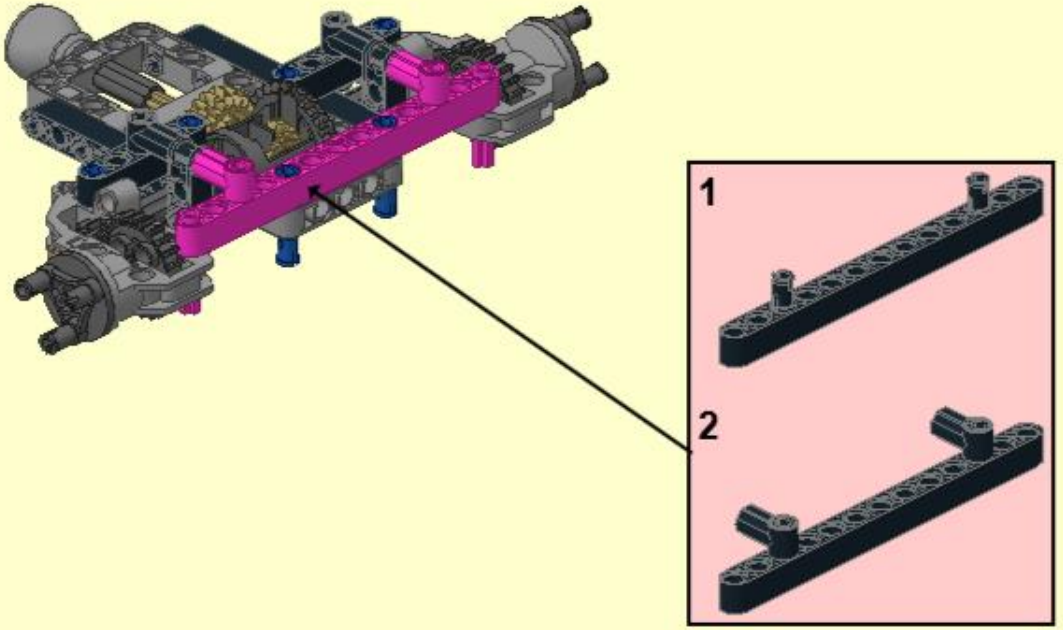

14

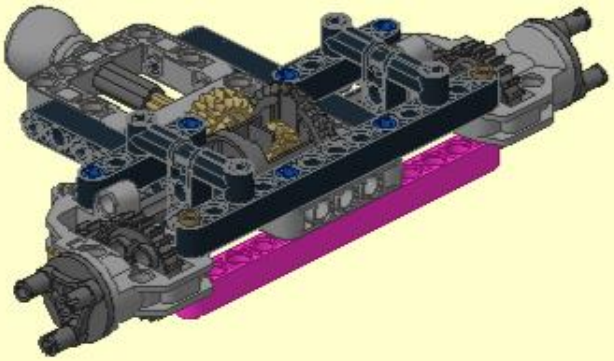

15

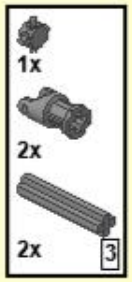

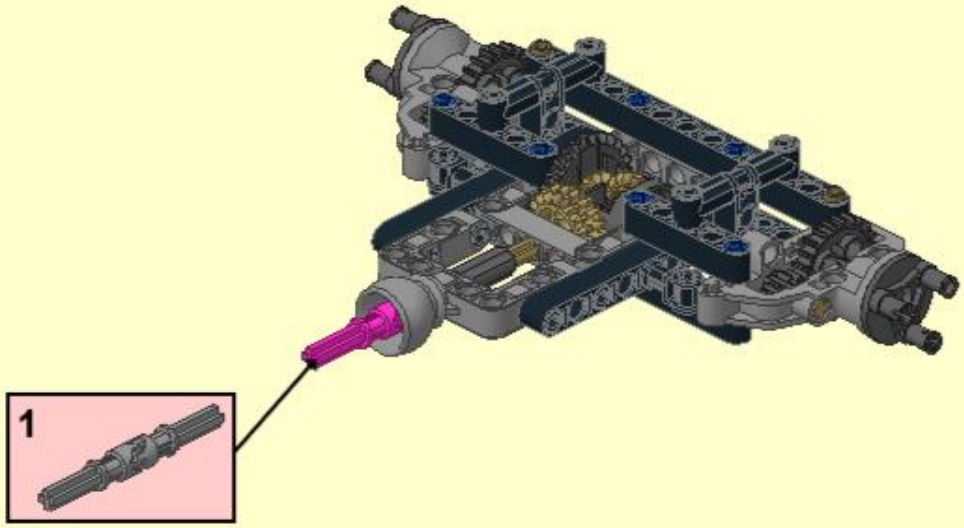

16

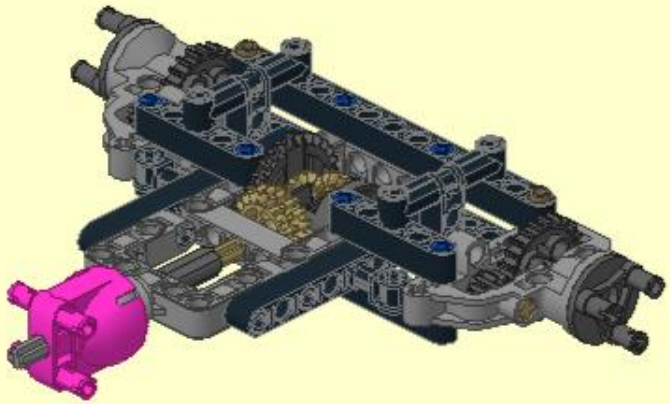

17

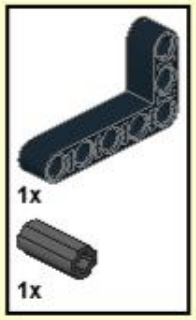

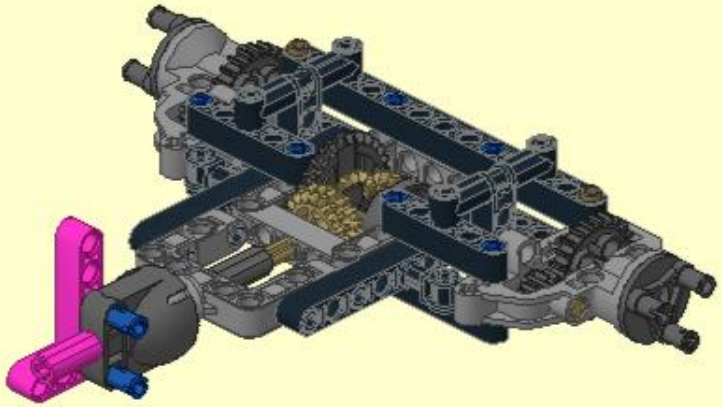

18

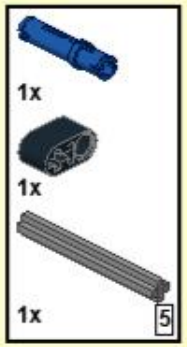

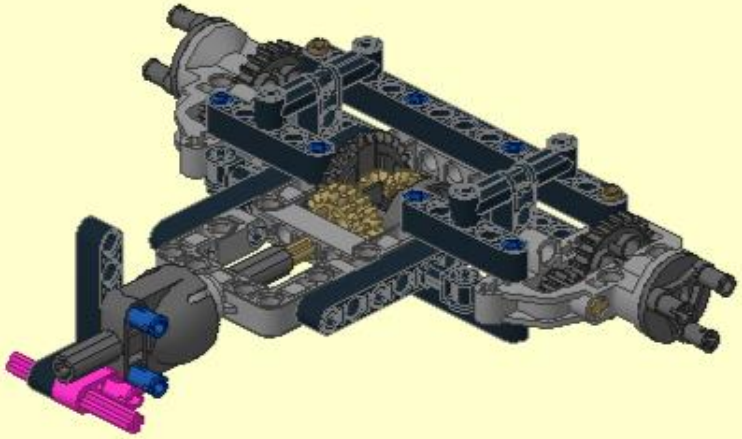

19

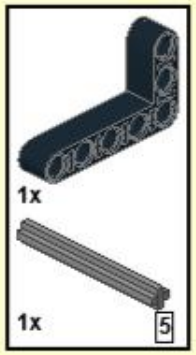

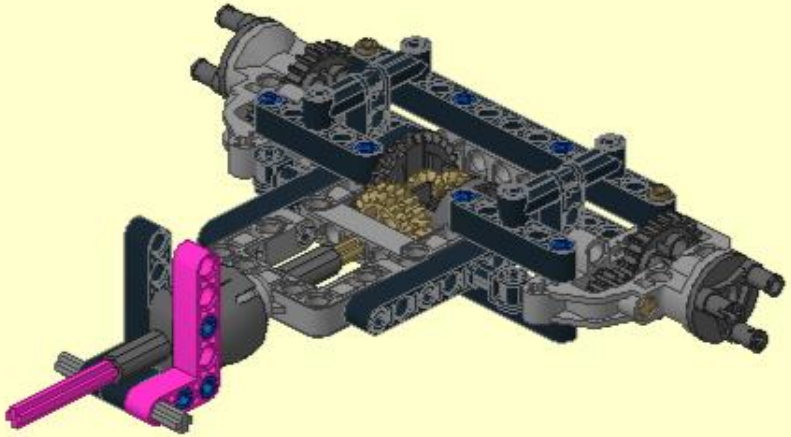

20

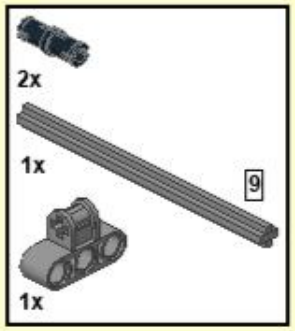

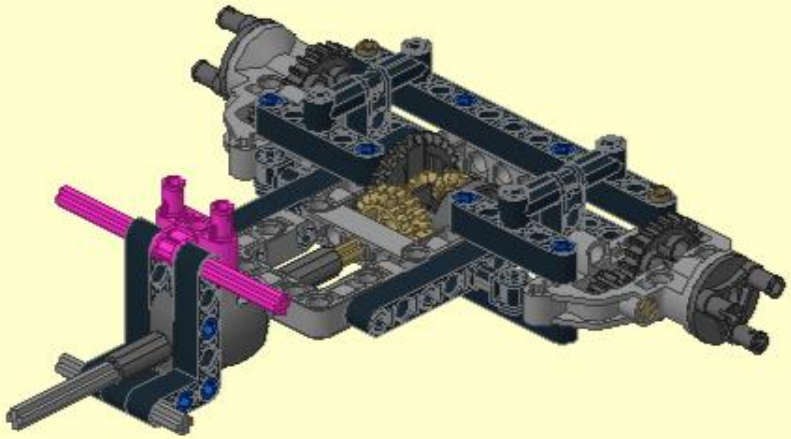

21

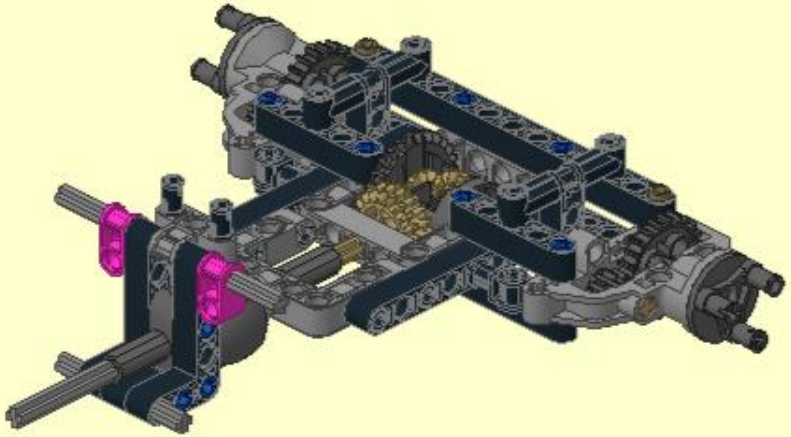

22

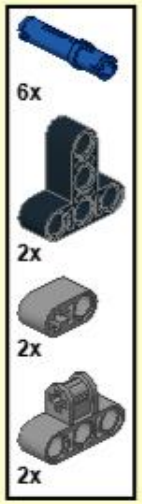

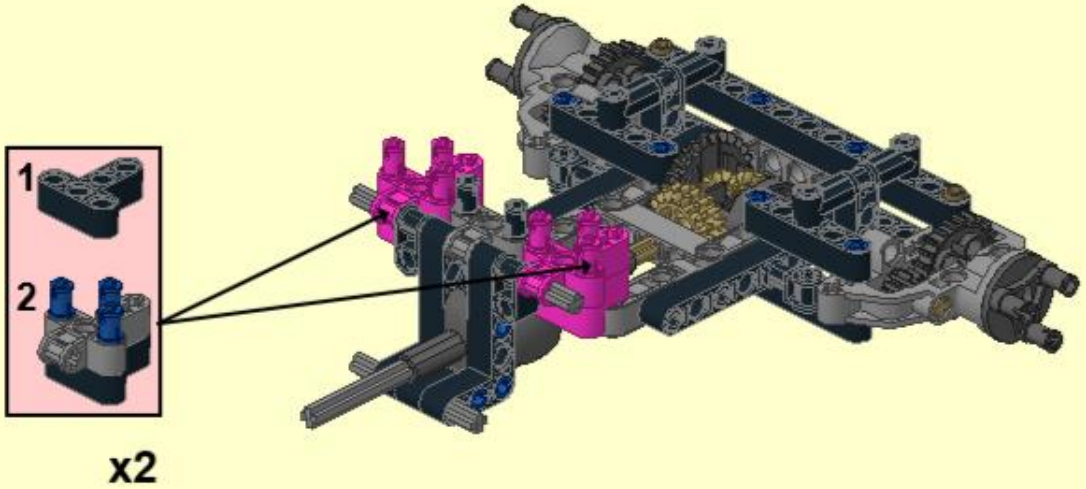

x2

23

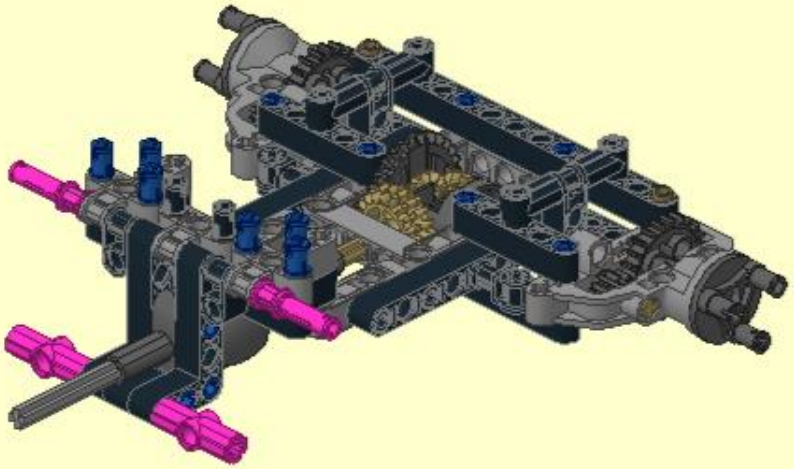

24

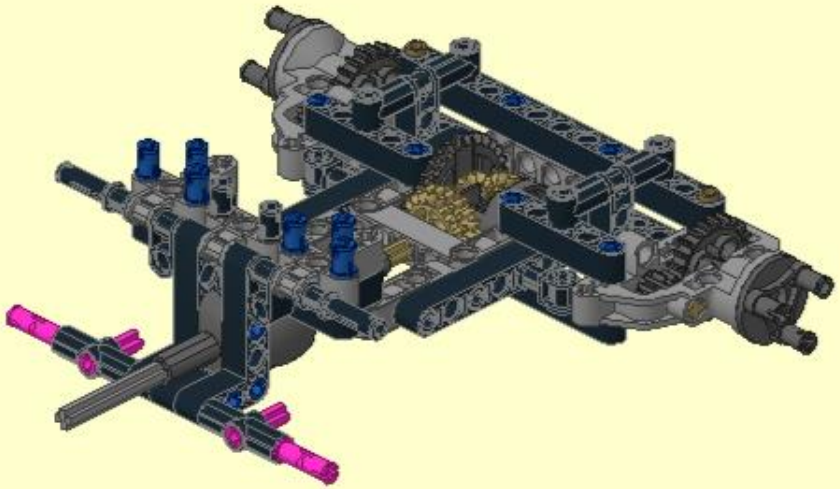

25

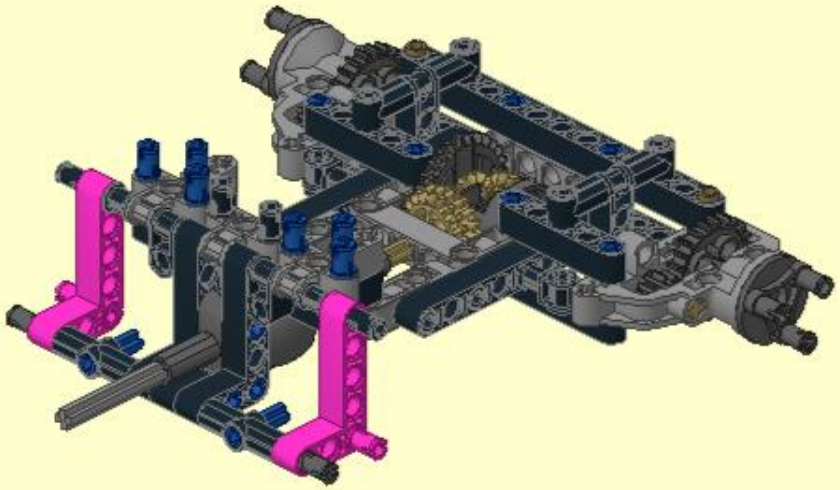

26

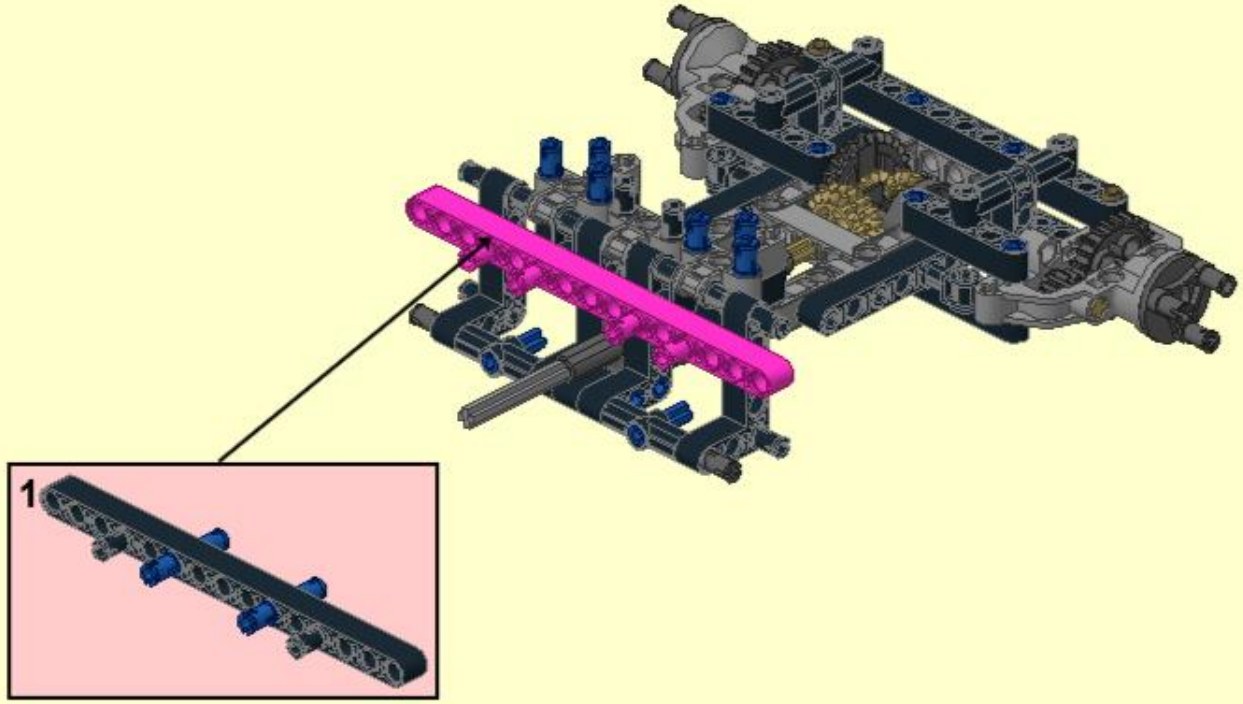

27

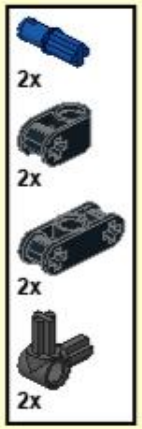

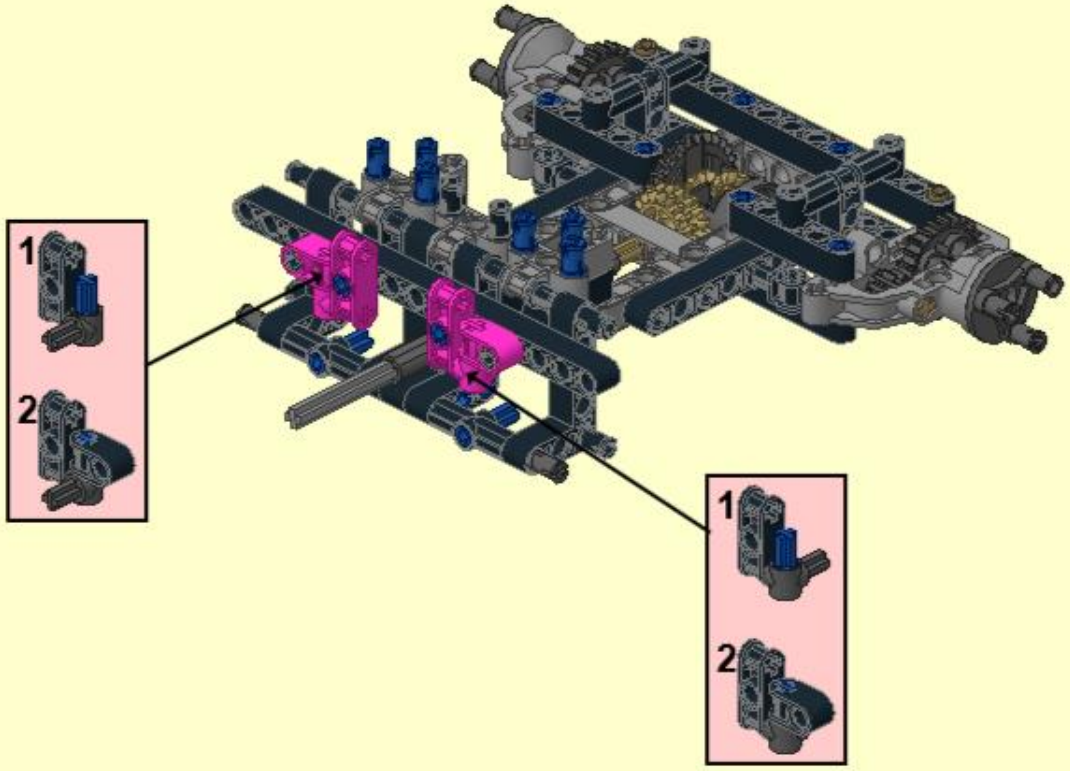

28

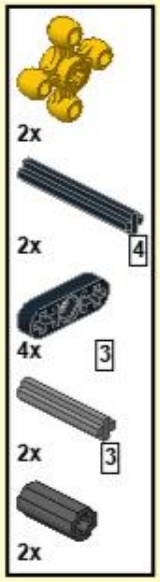

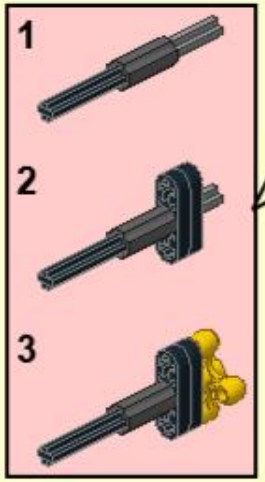

x2

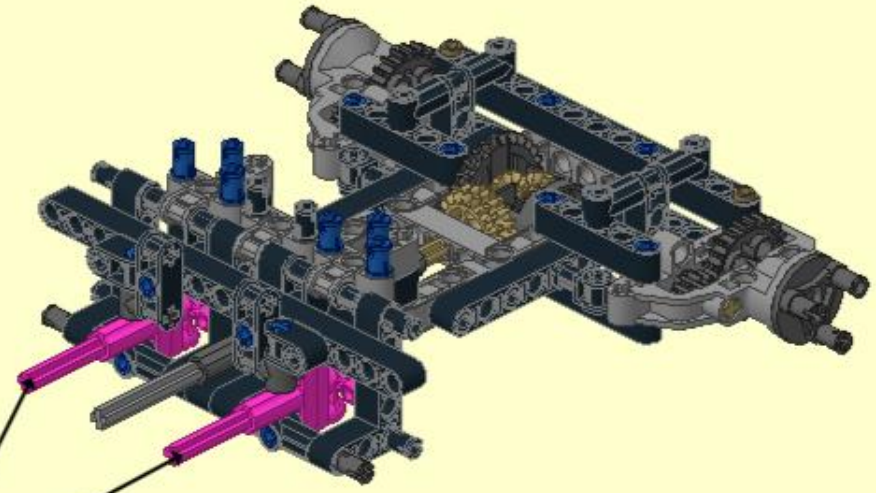

29

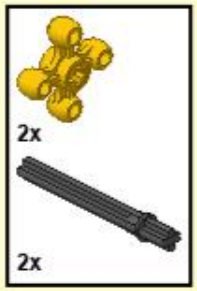

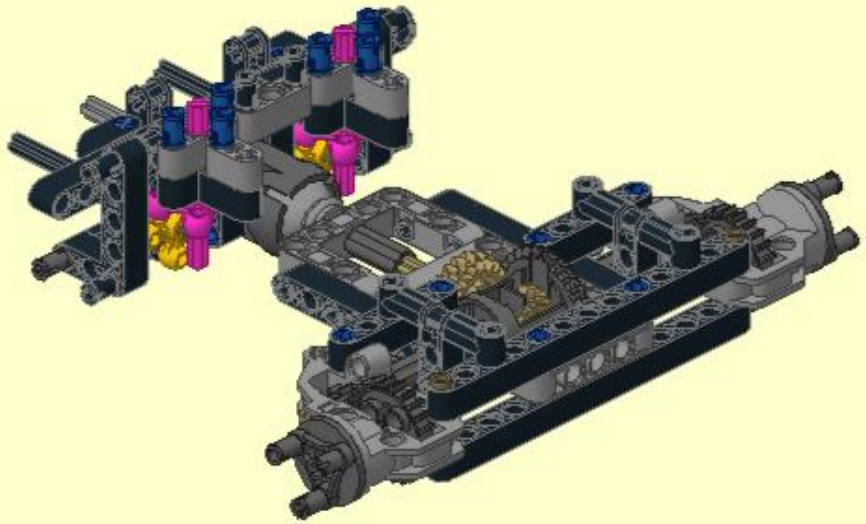

30

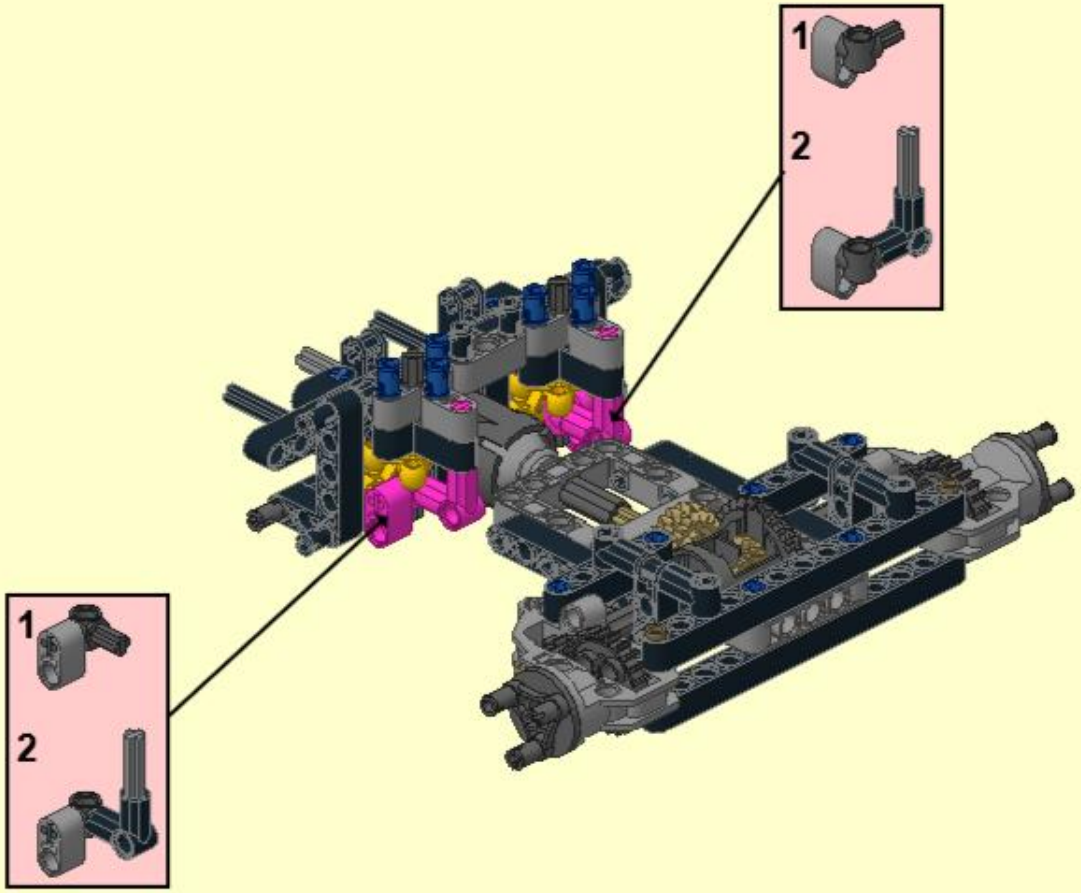

51

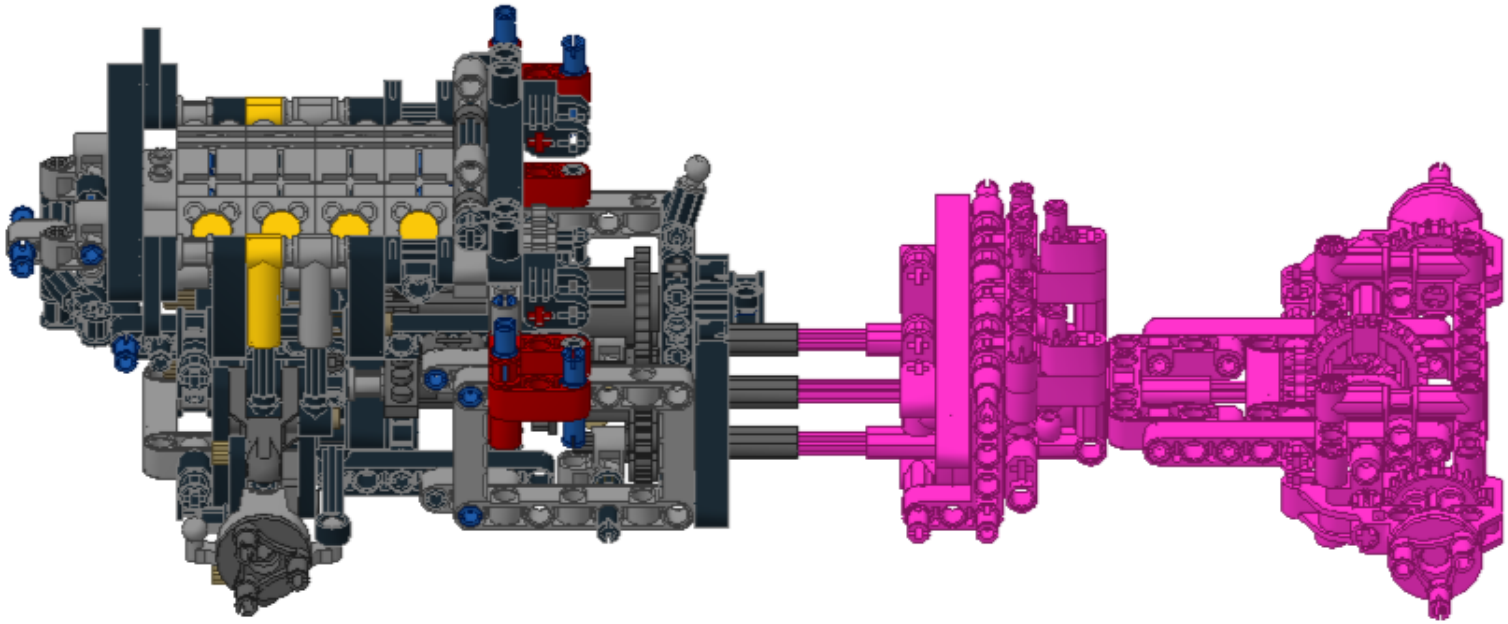

©jokey02

52

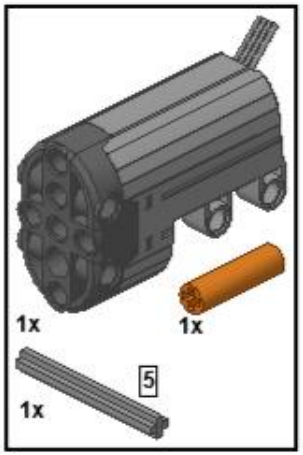

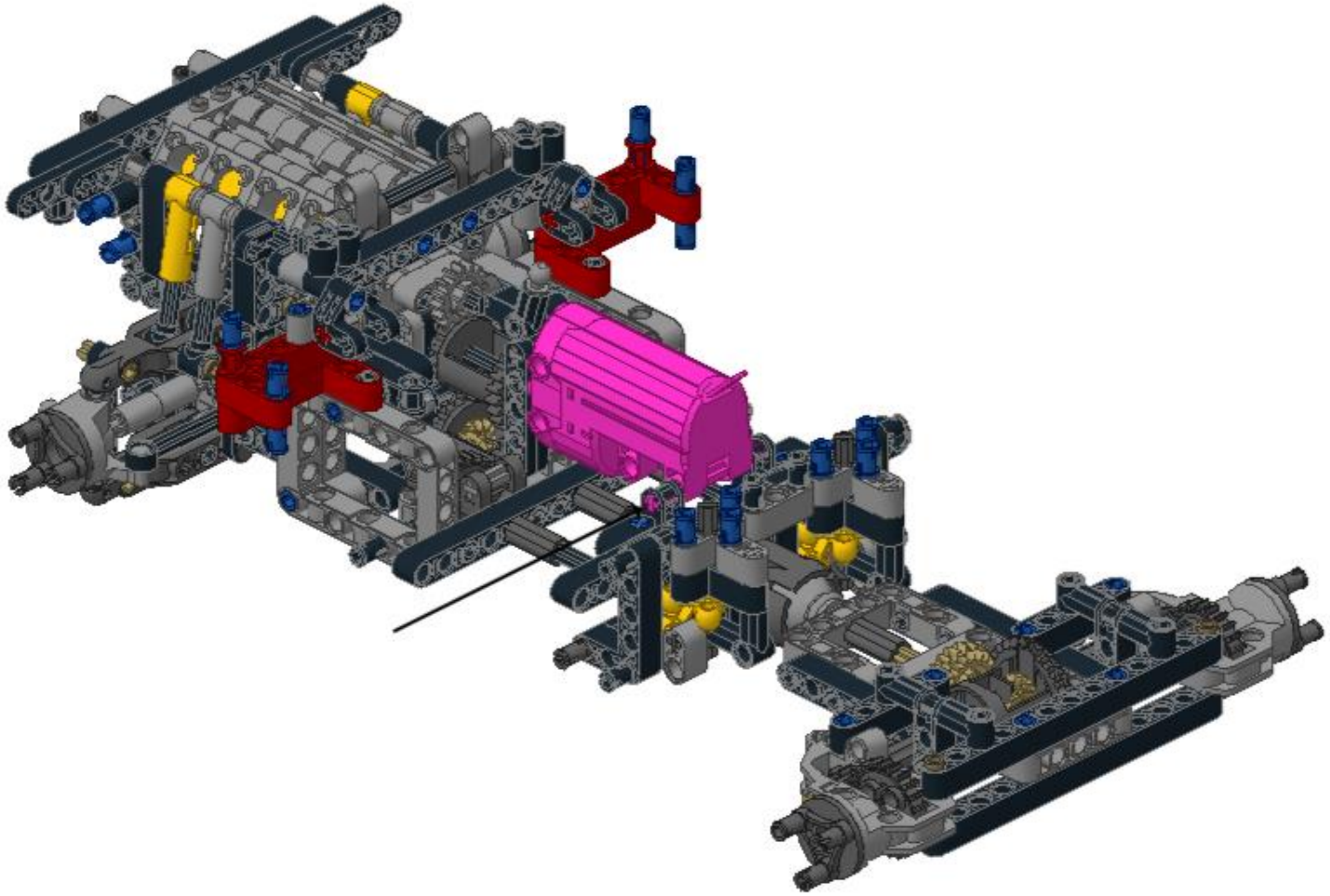

53

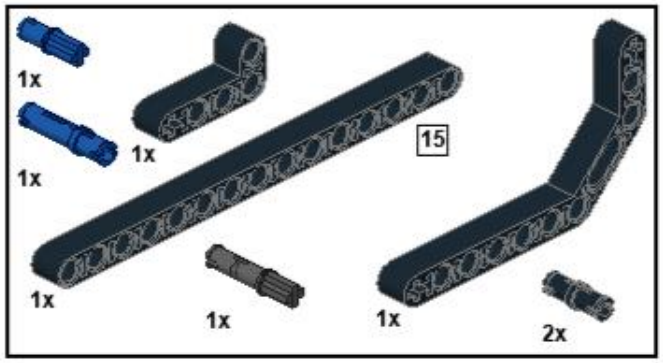

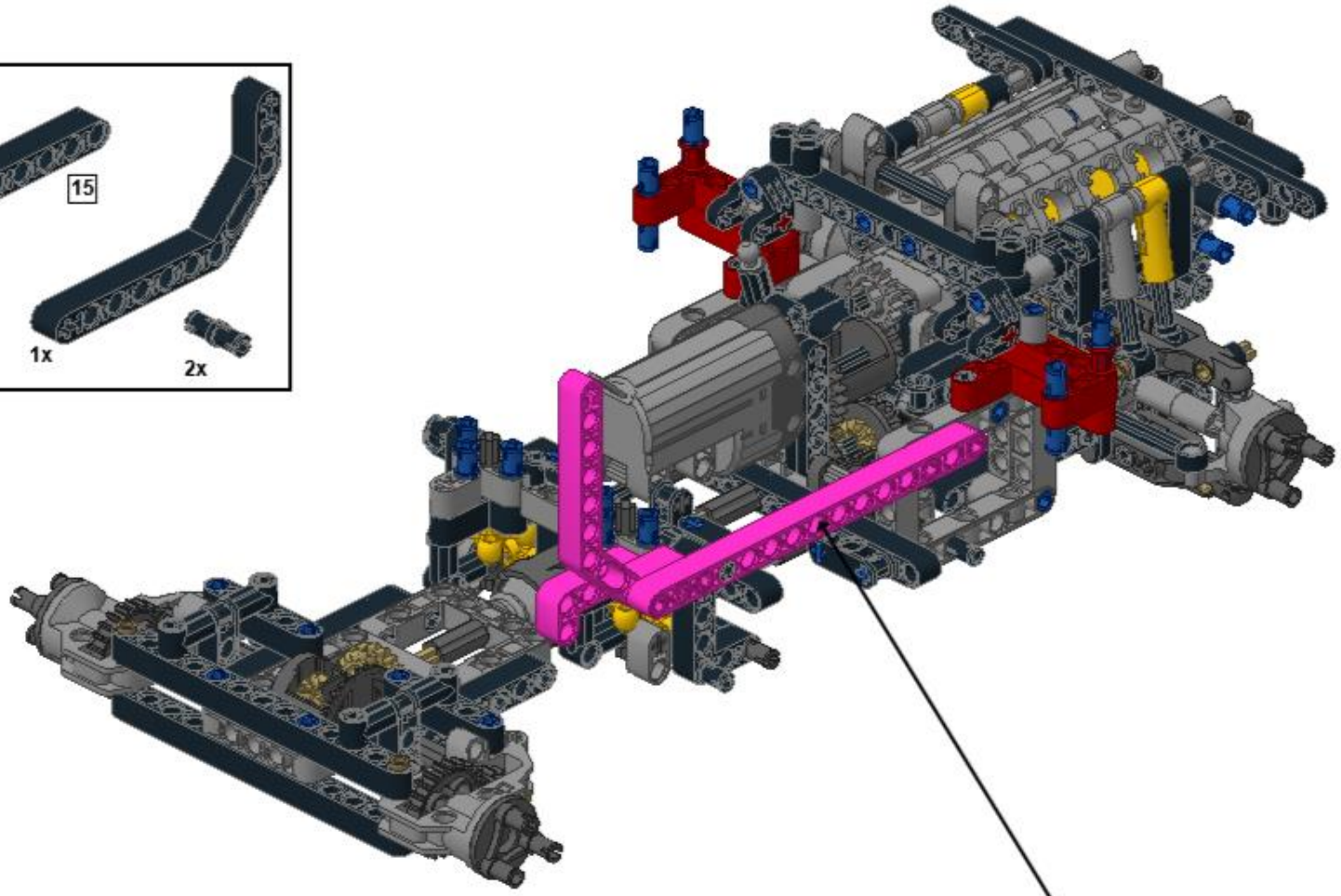

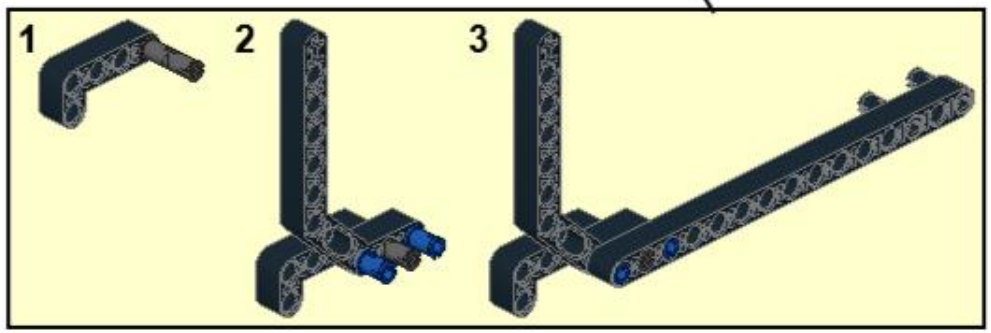

54

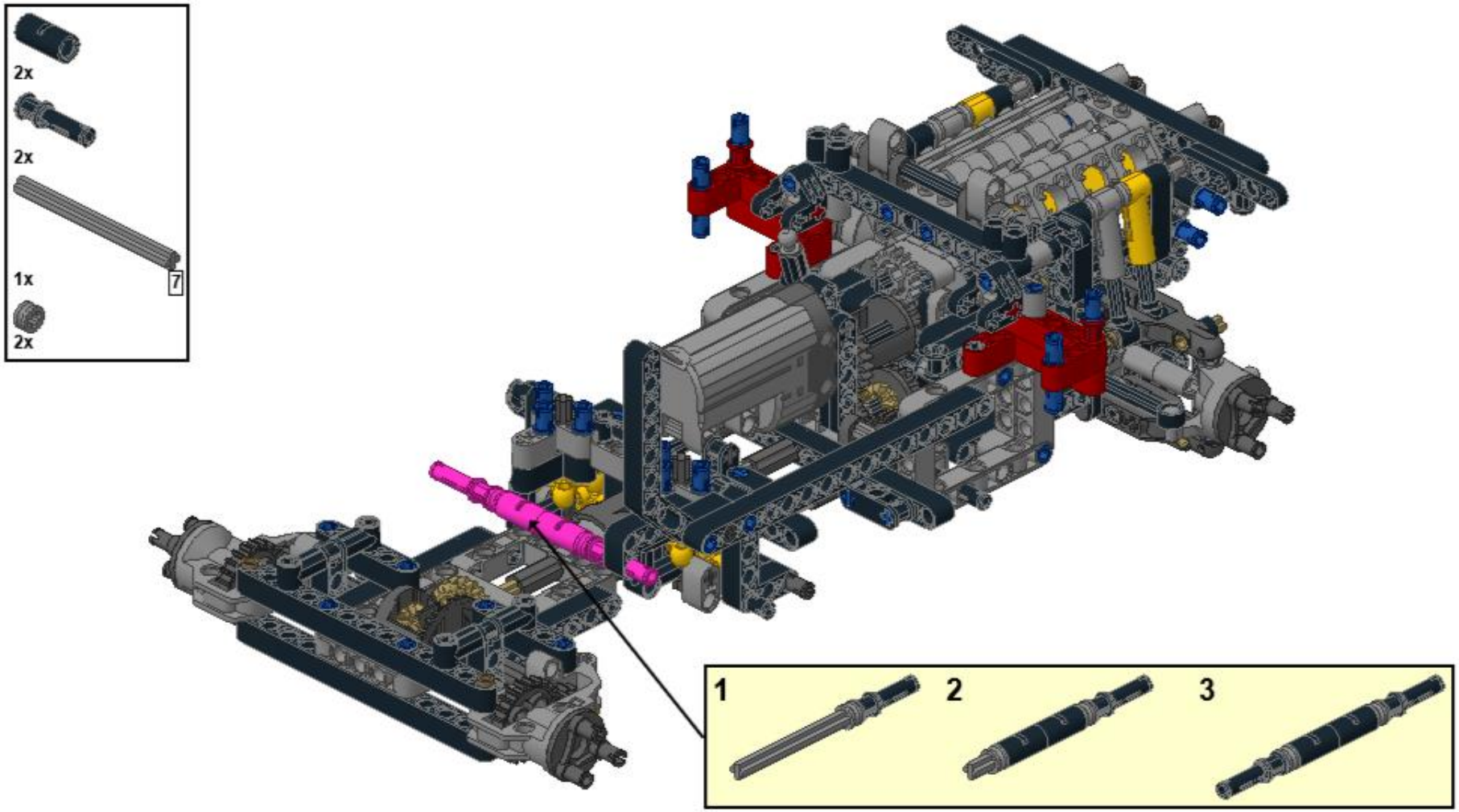

55

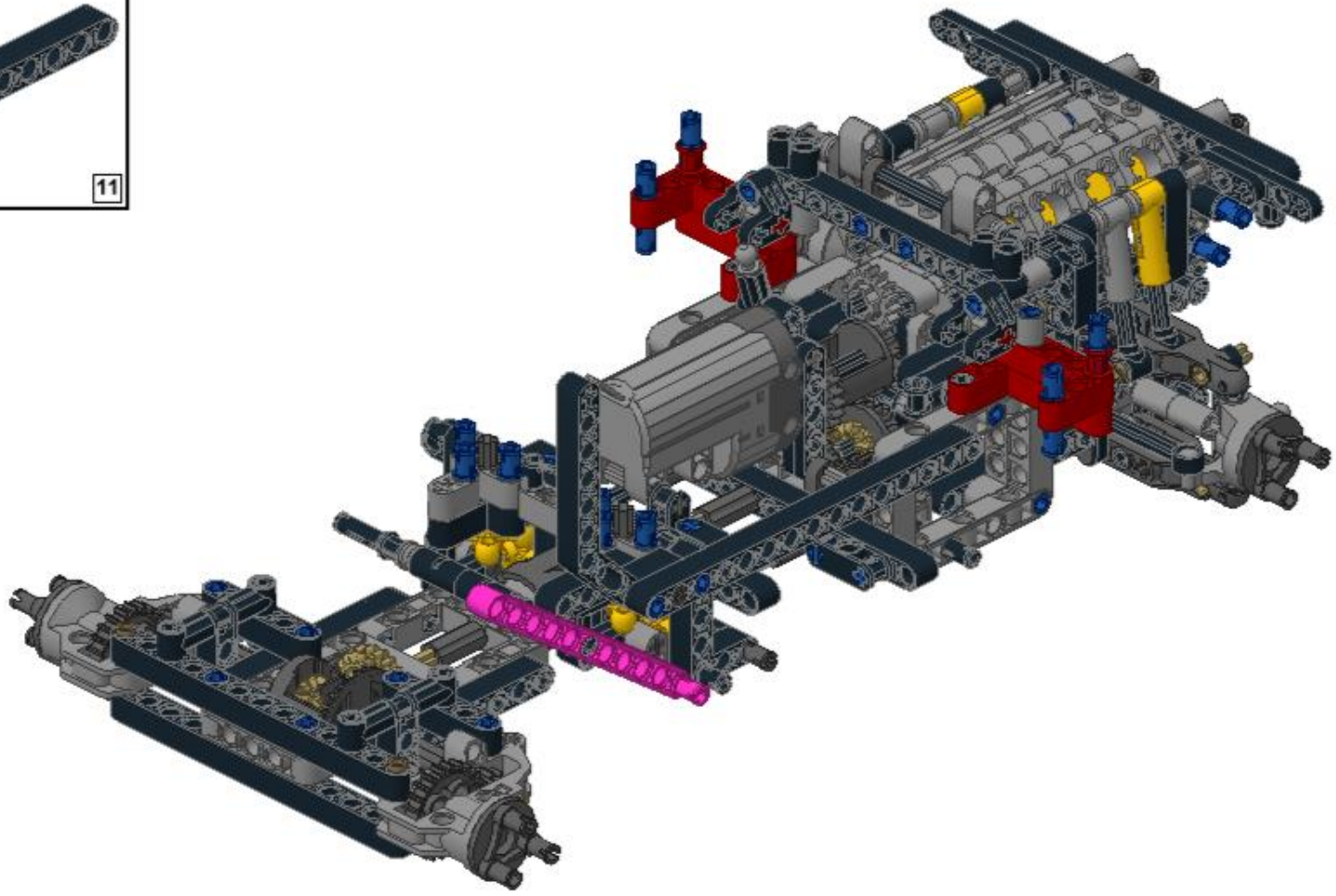

56

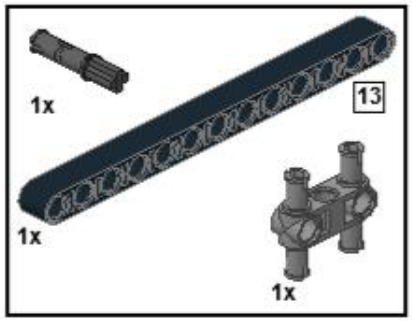

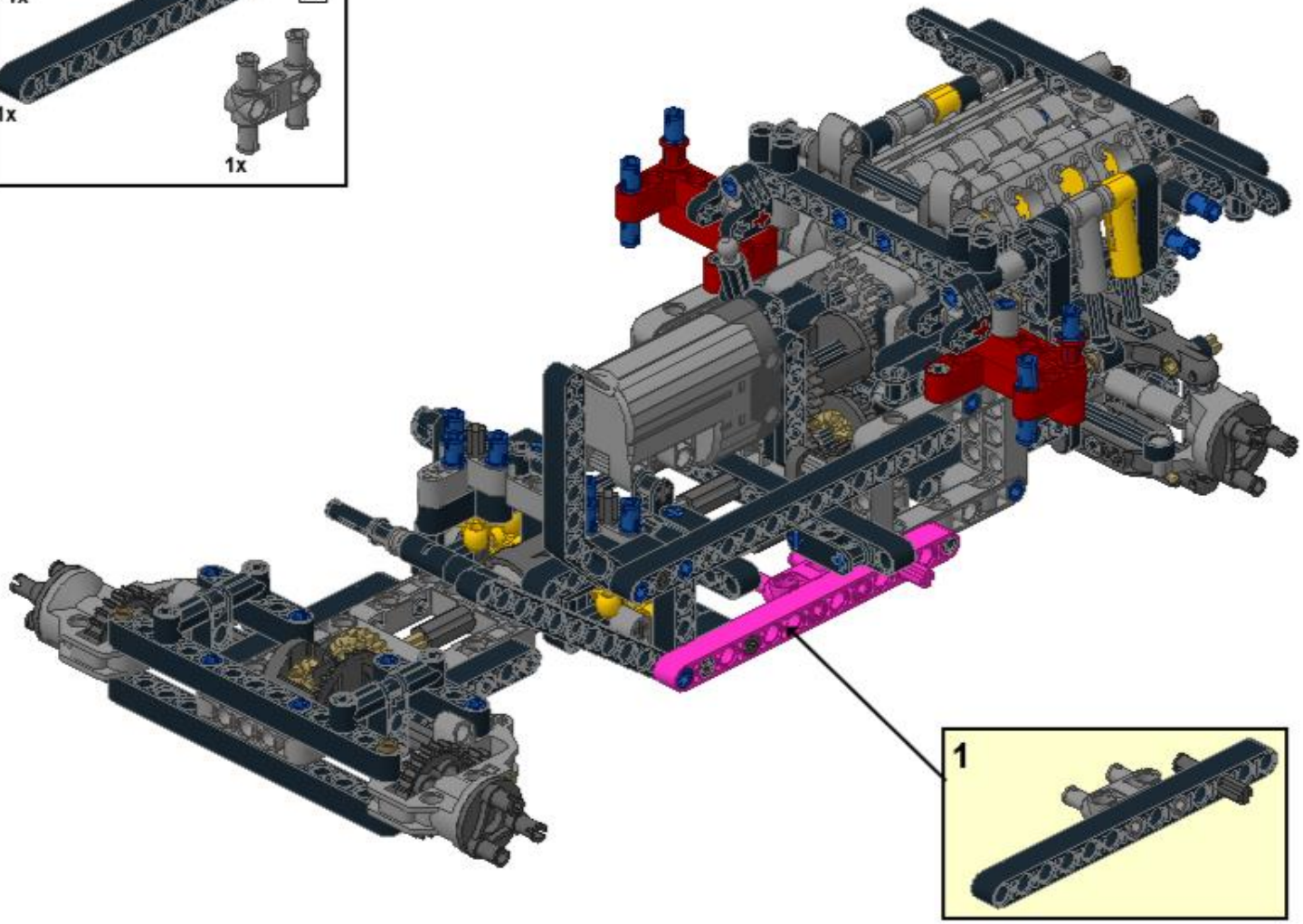

57

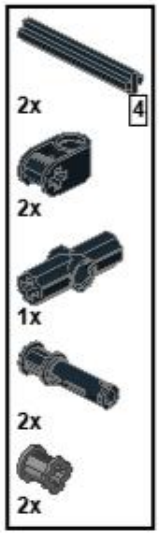

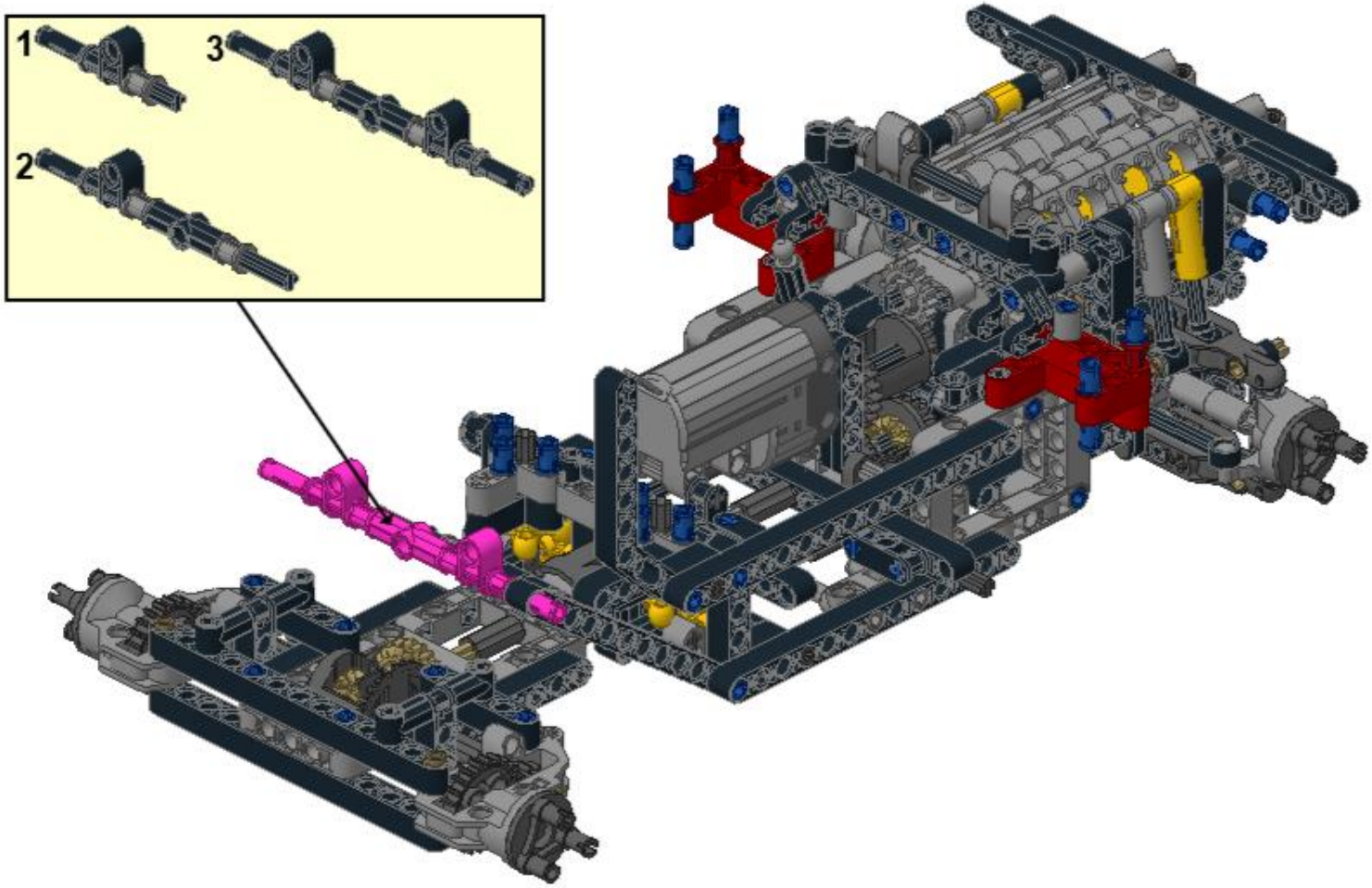

58

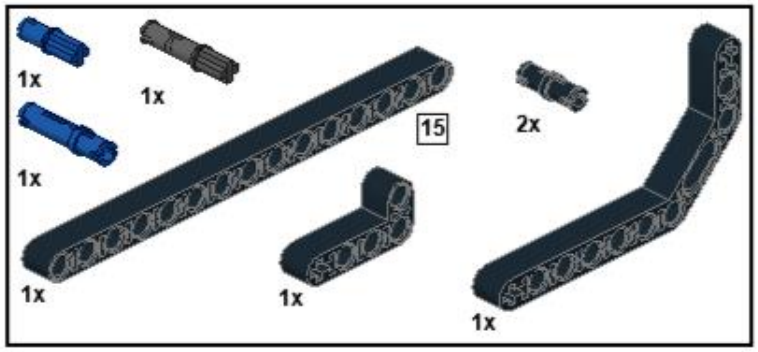

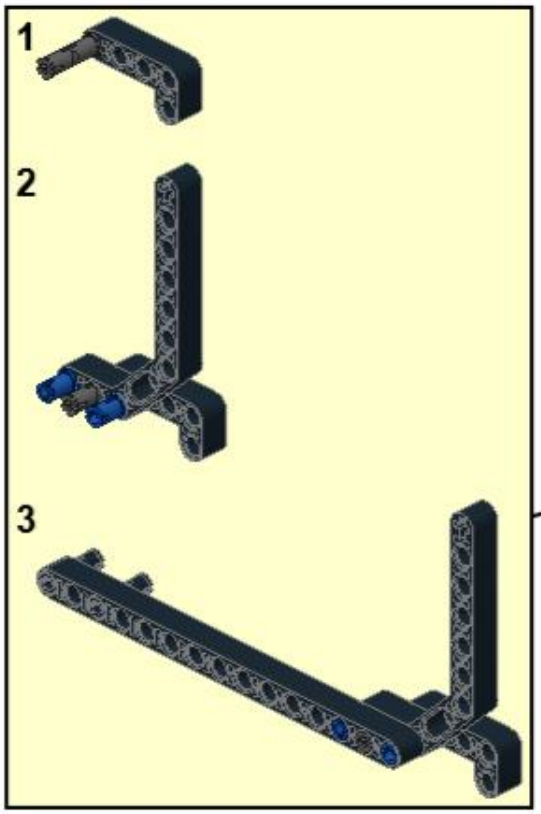

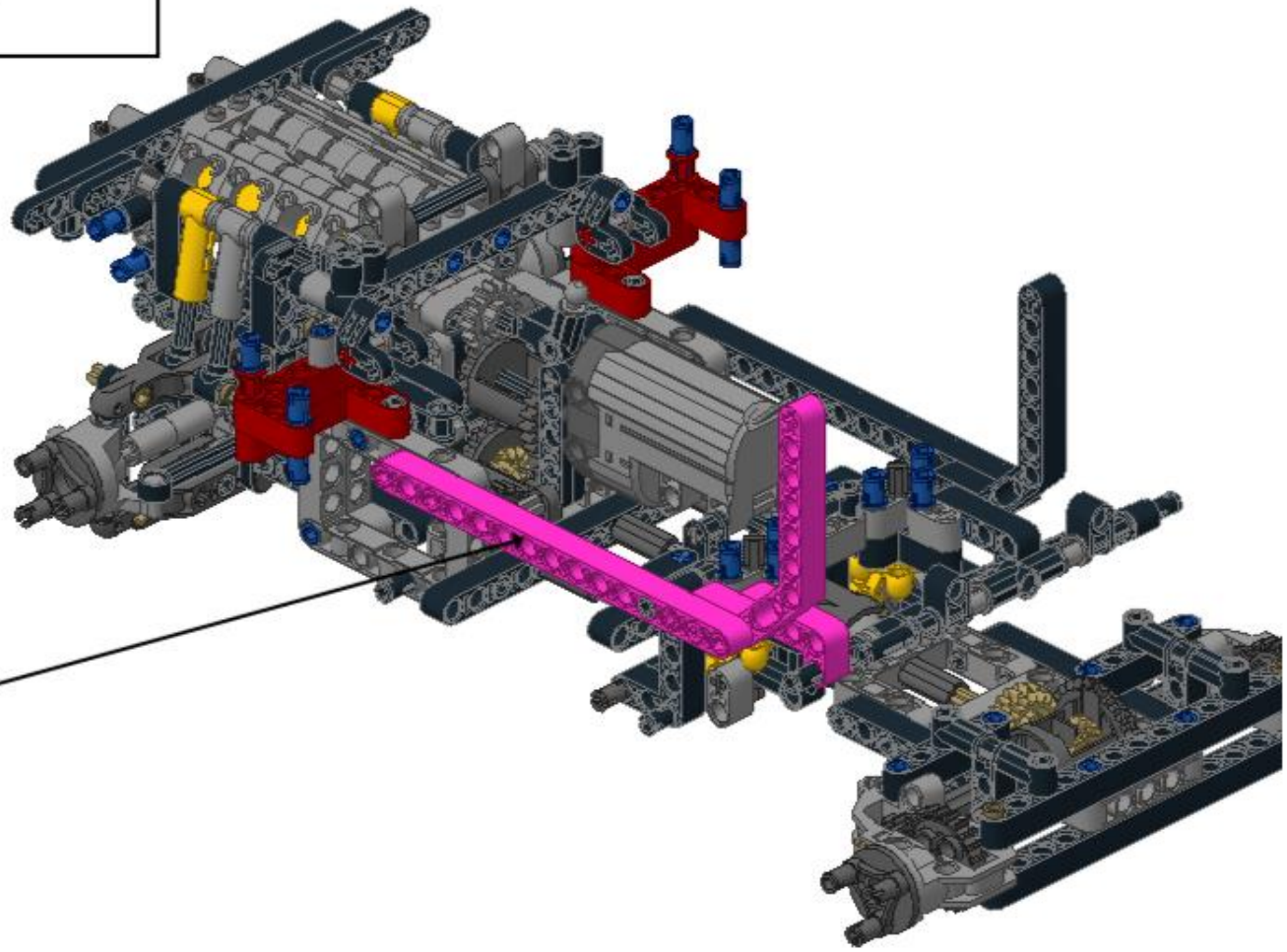

59

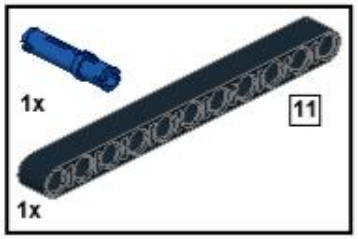

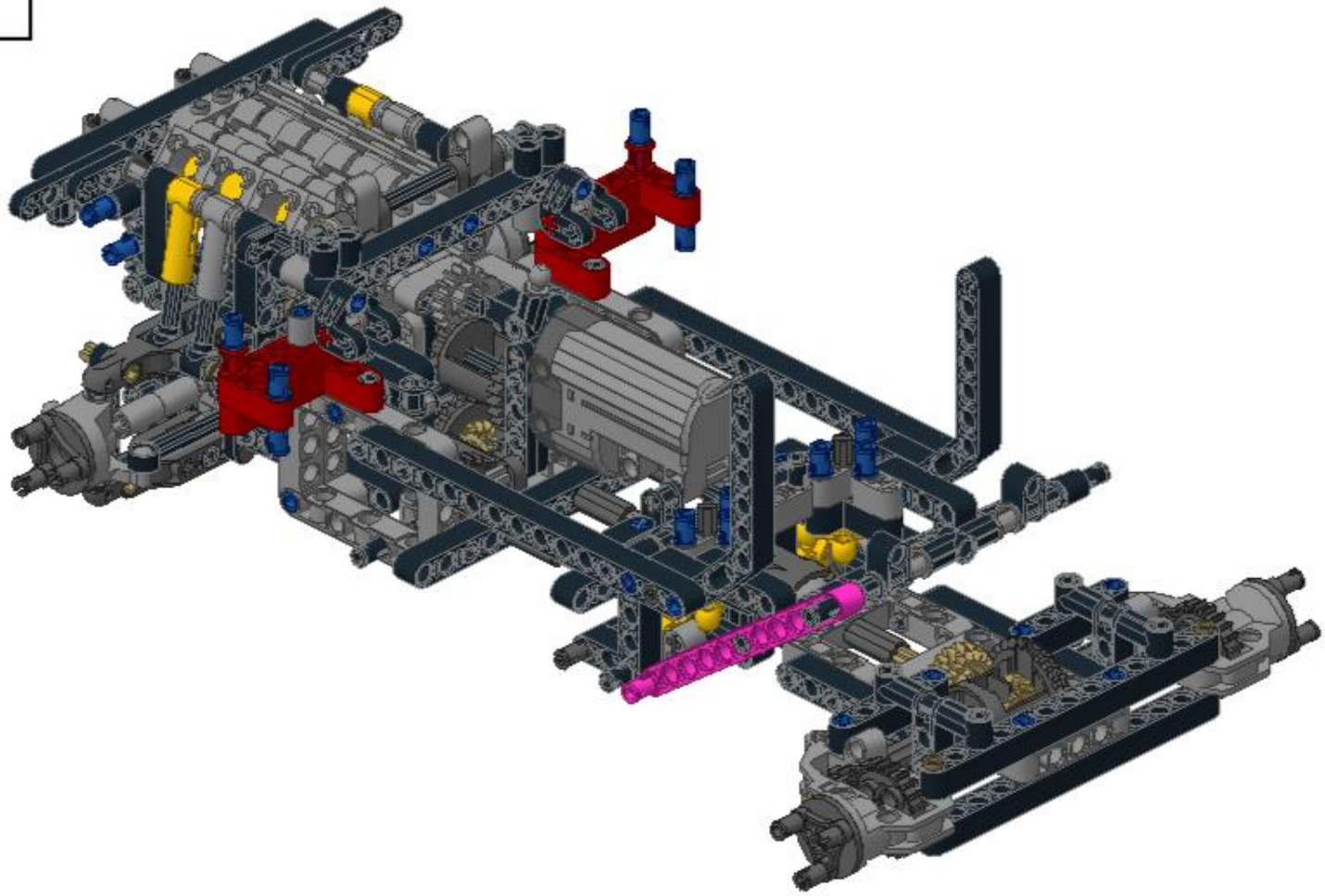

60

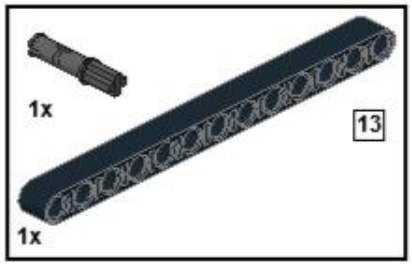

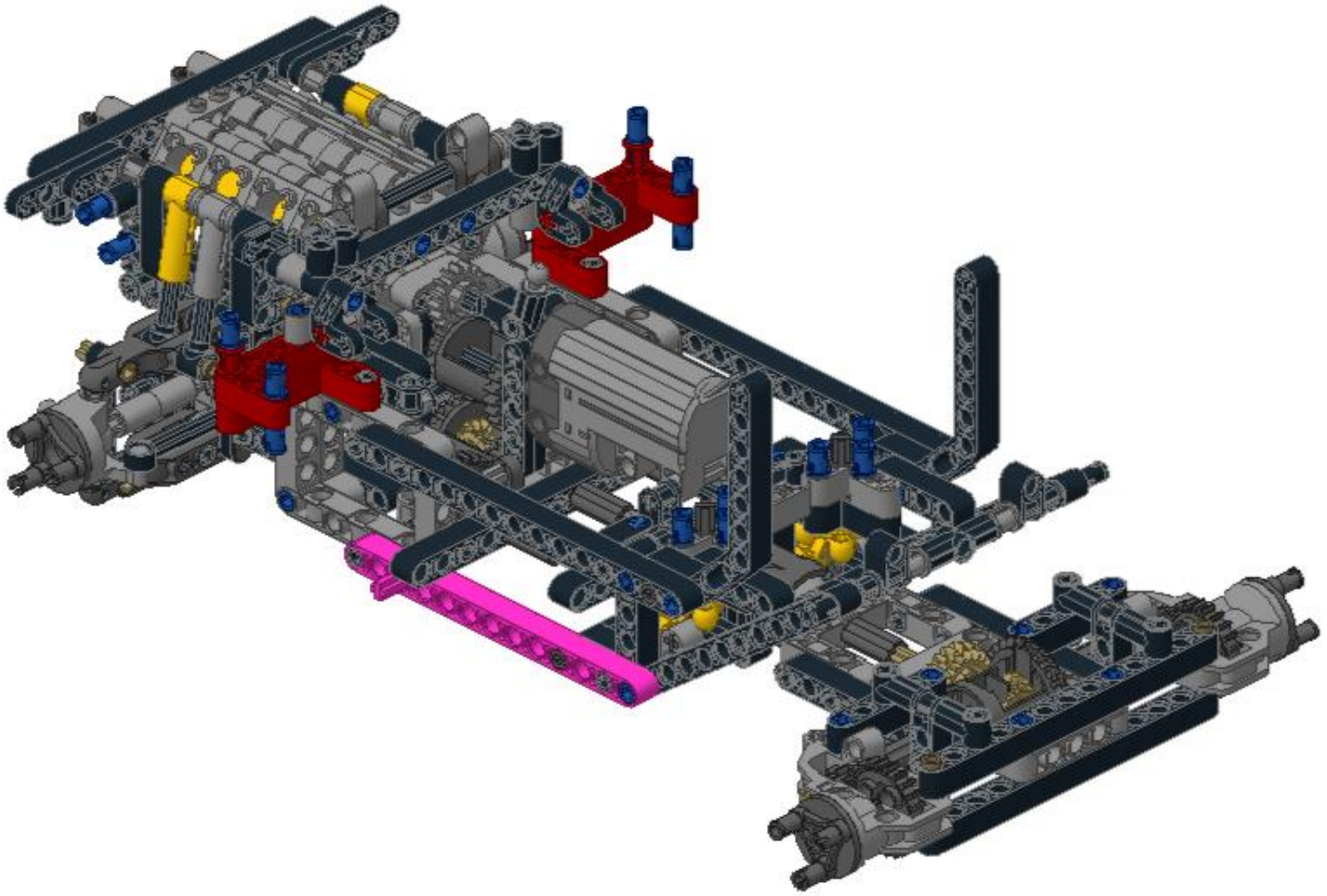

©jokey02

61

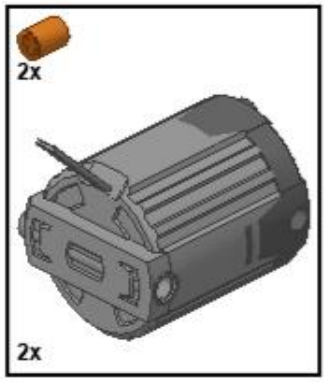

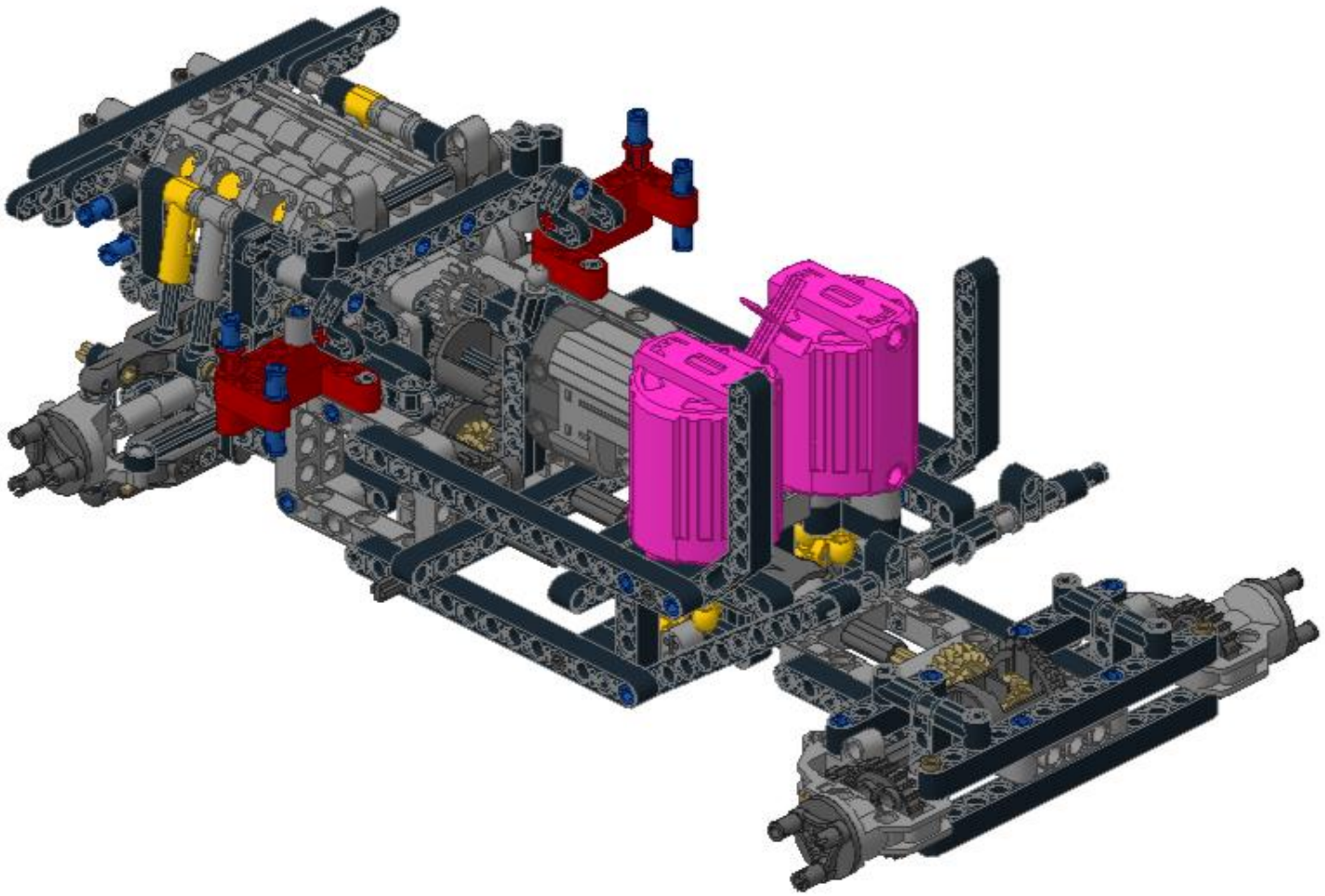

62

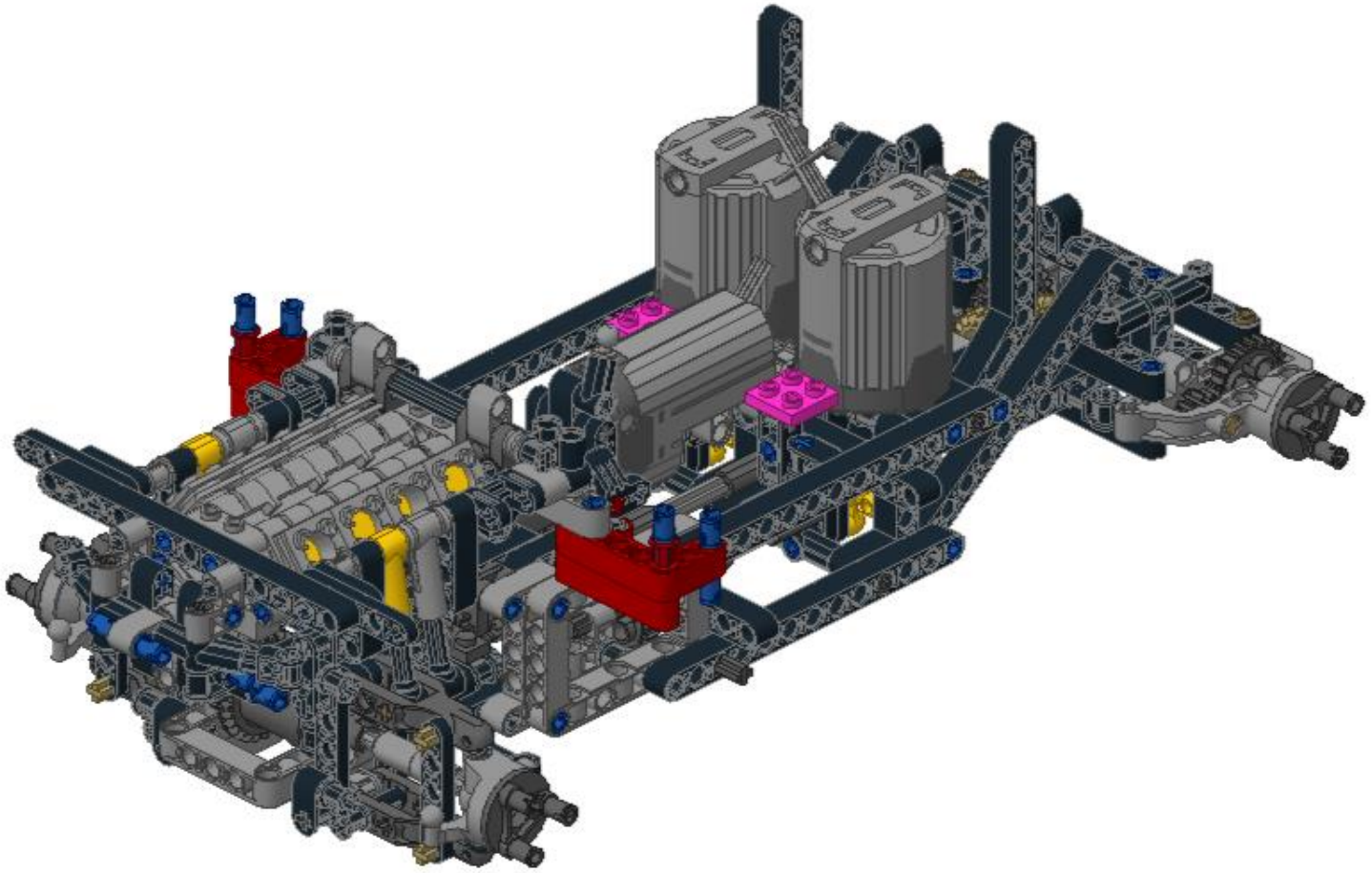

©jokey02

63

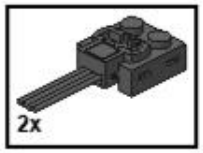

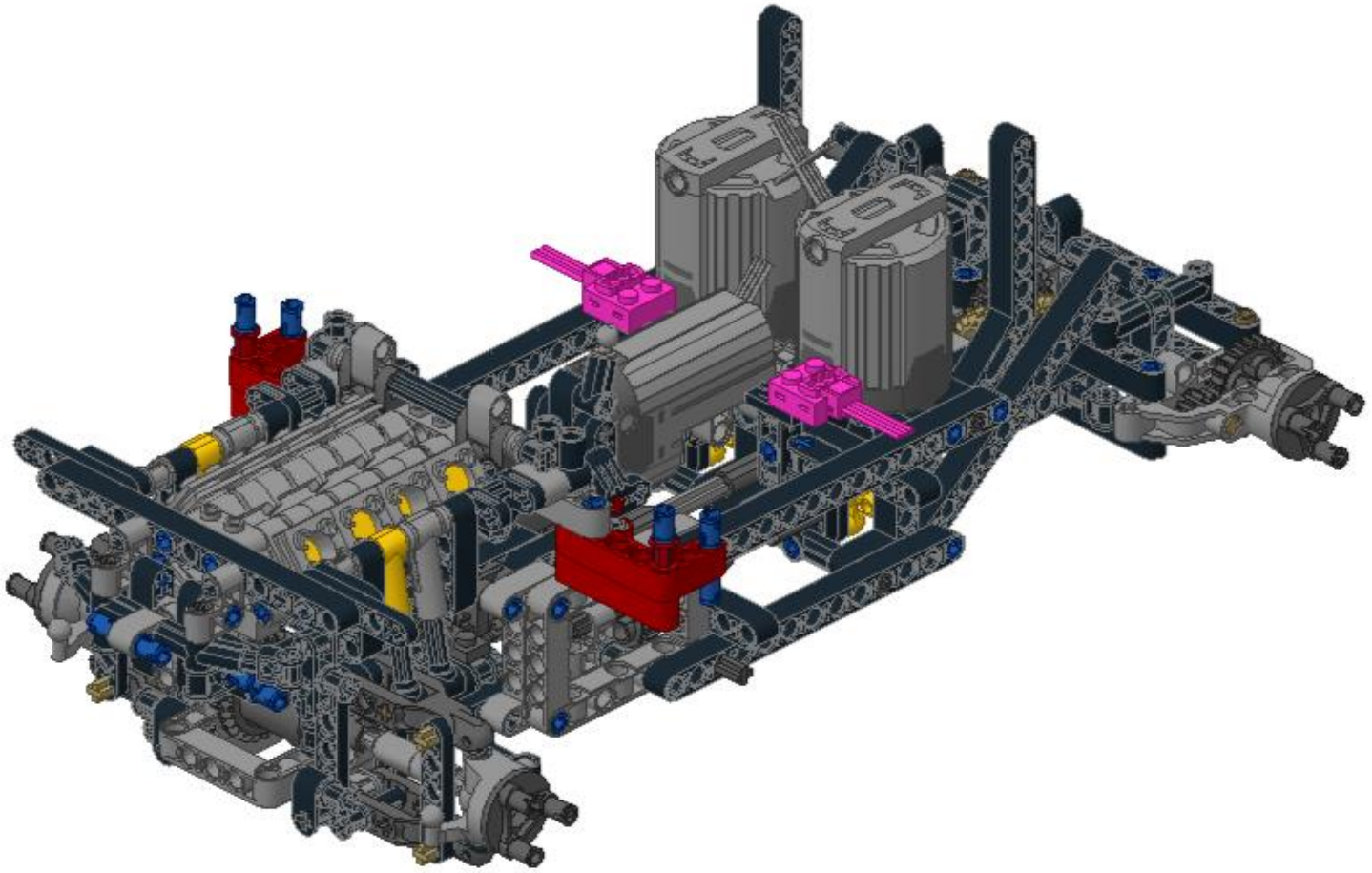

©jokey02

64

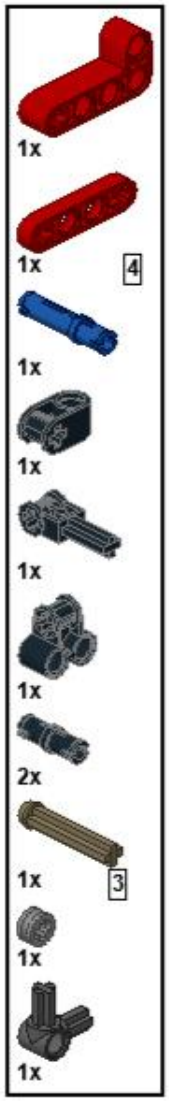

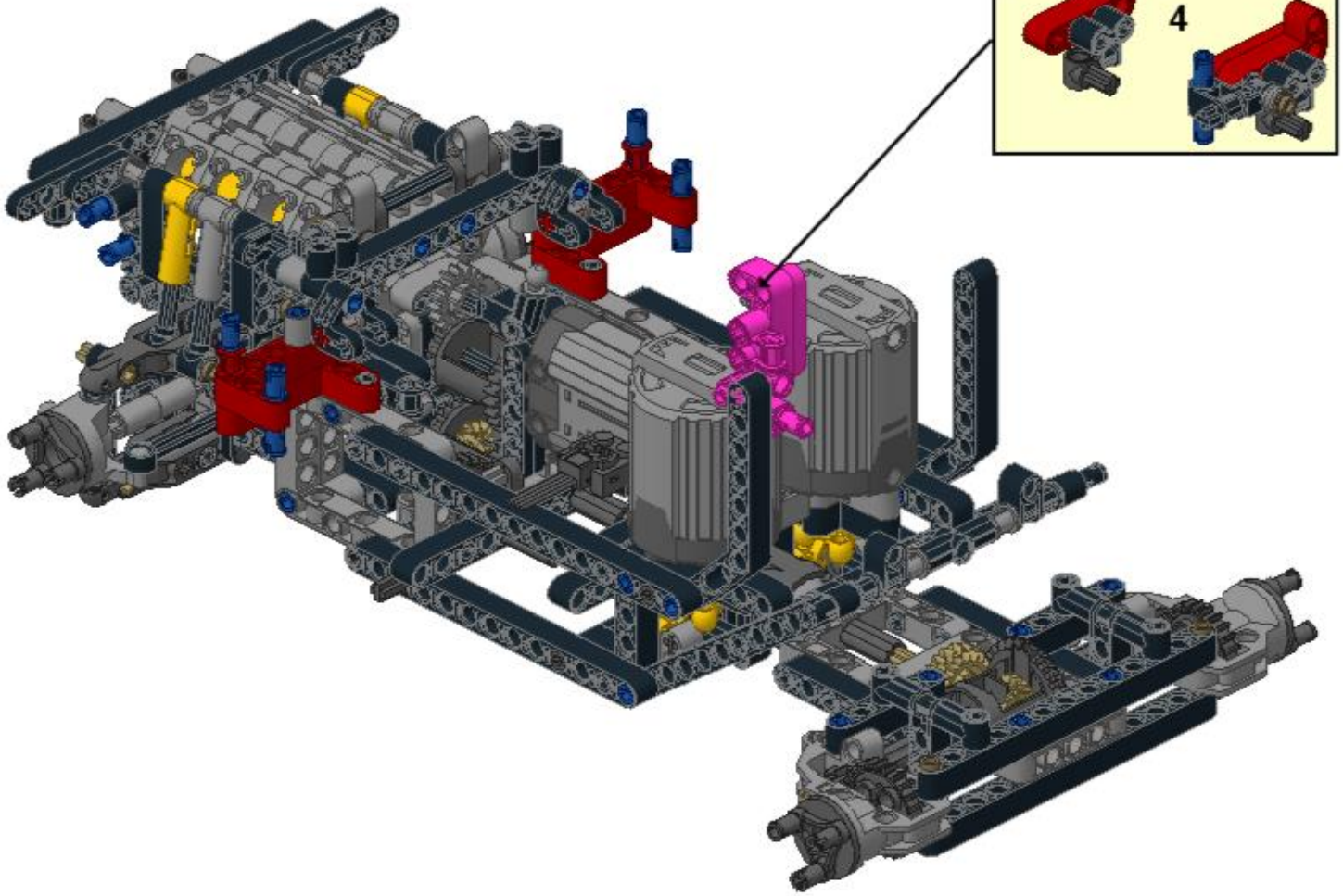

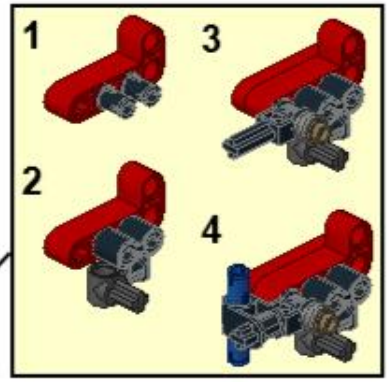

65

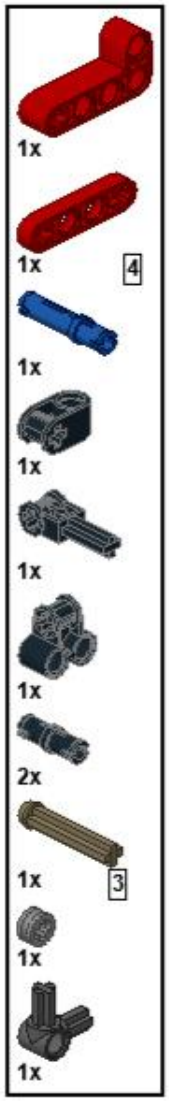

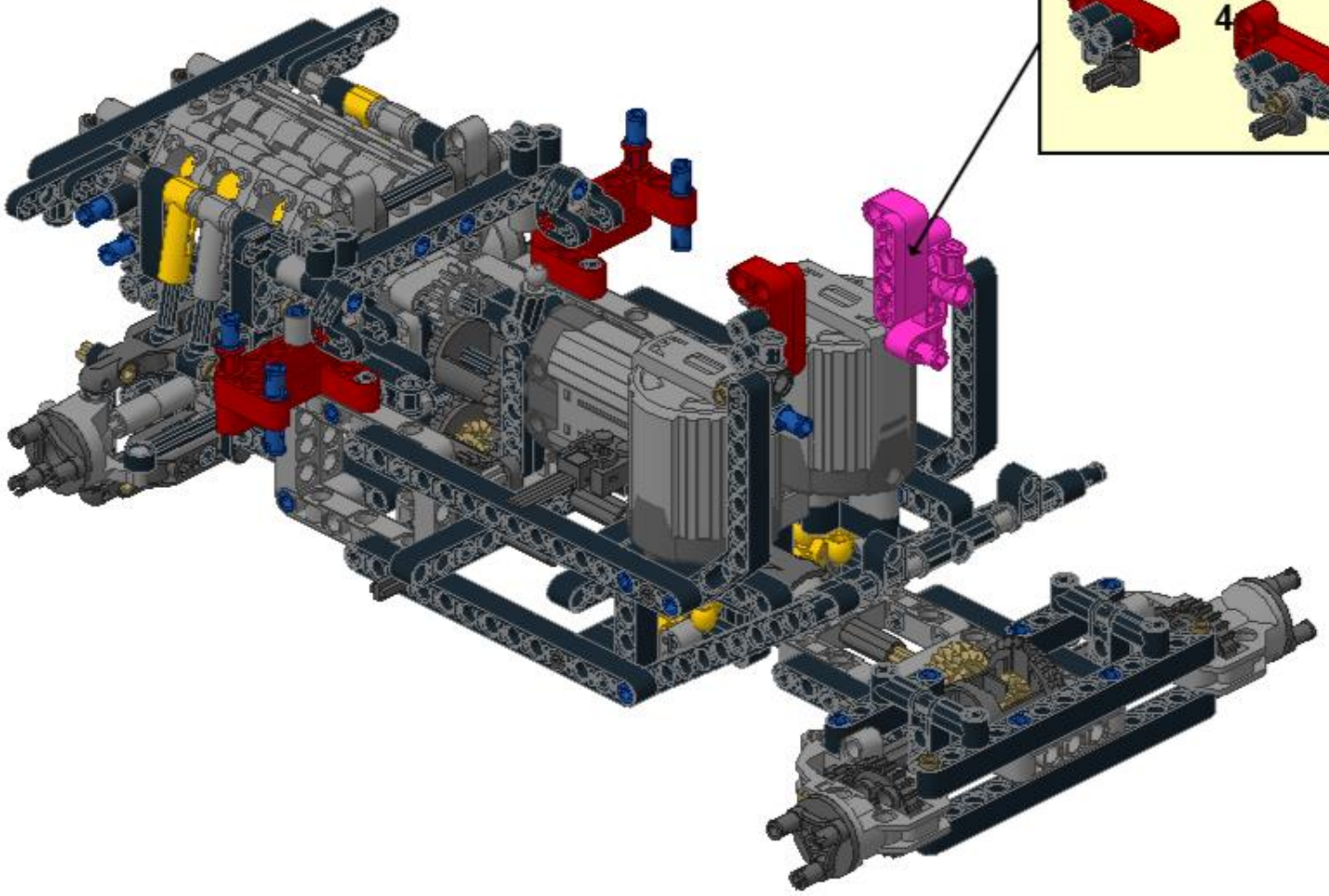

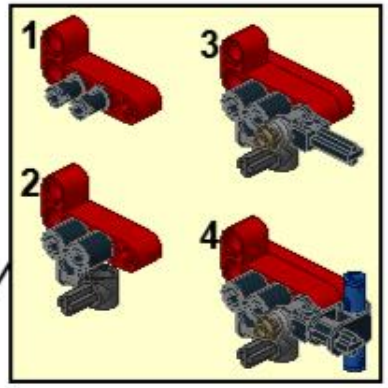

©jokey02

66

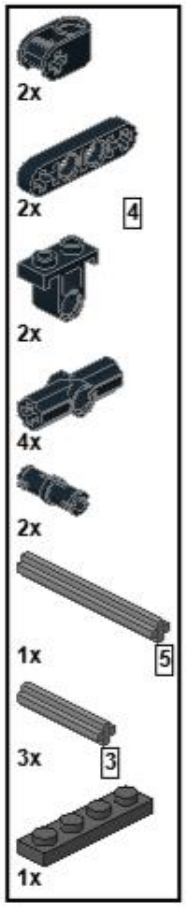

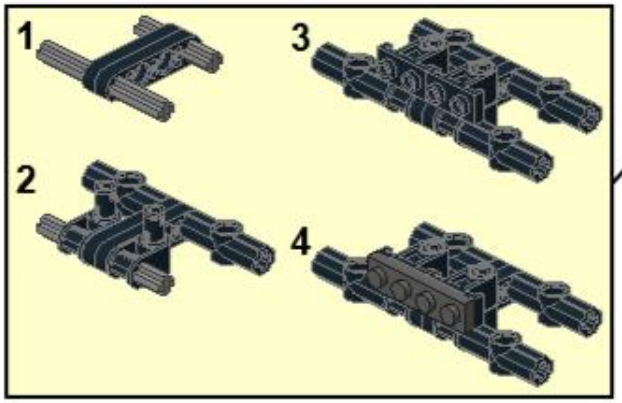

©jokey02

67

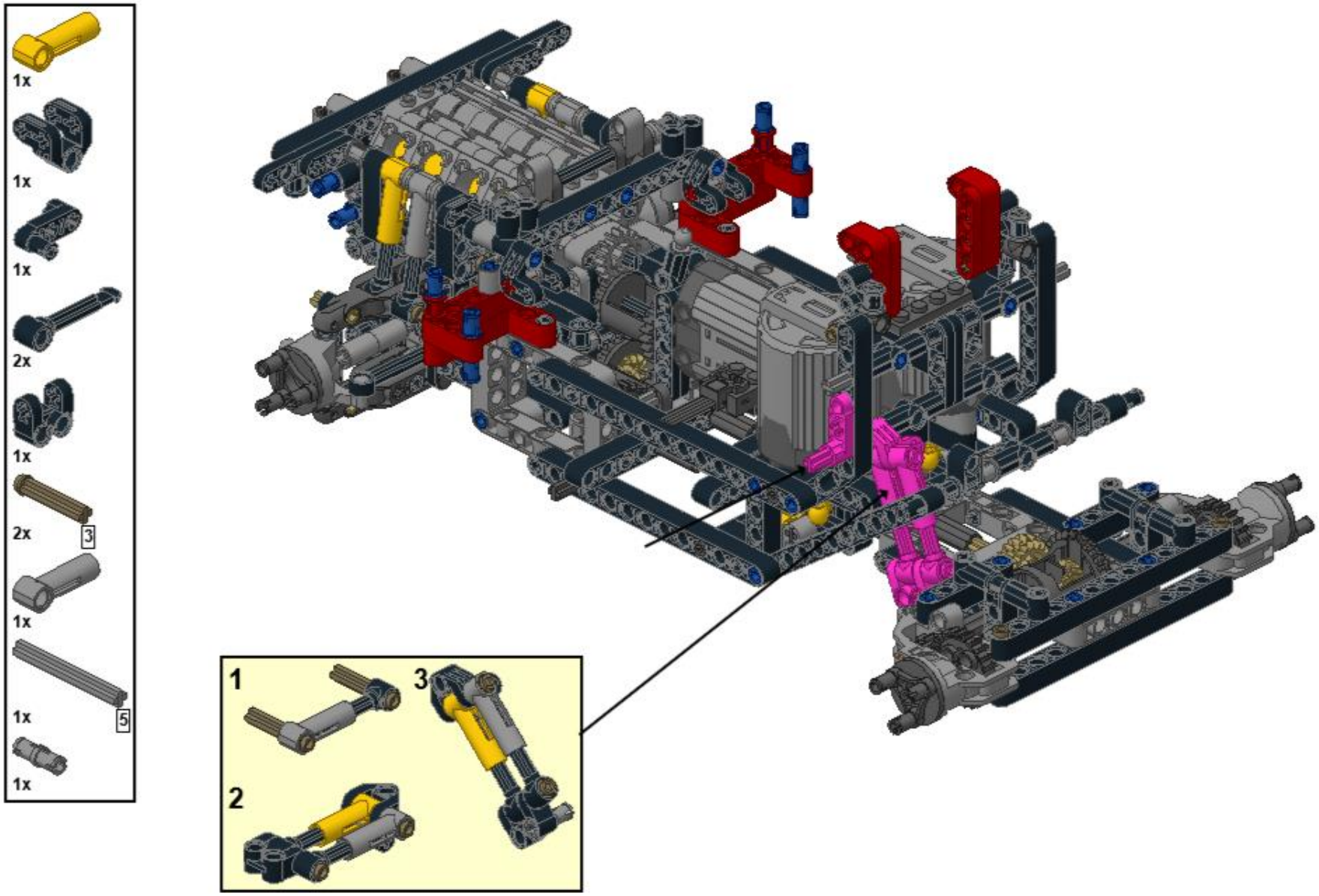

68

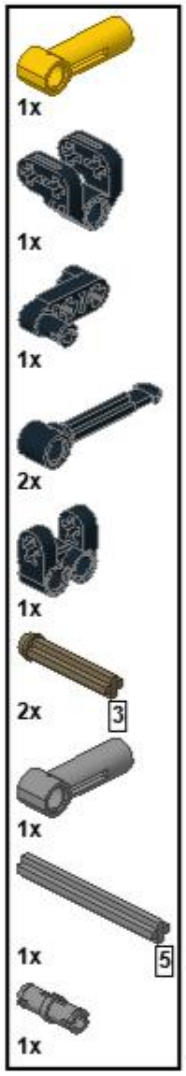

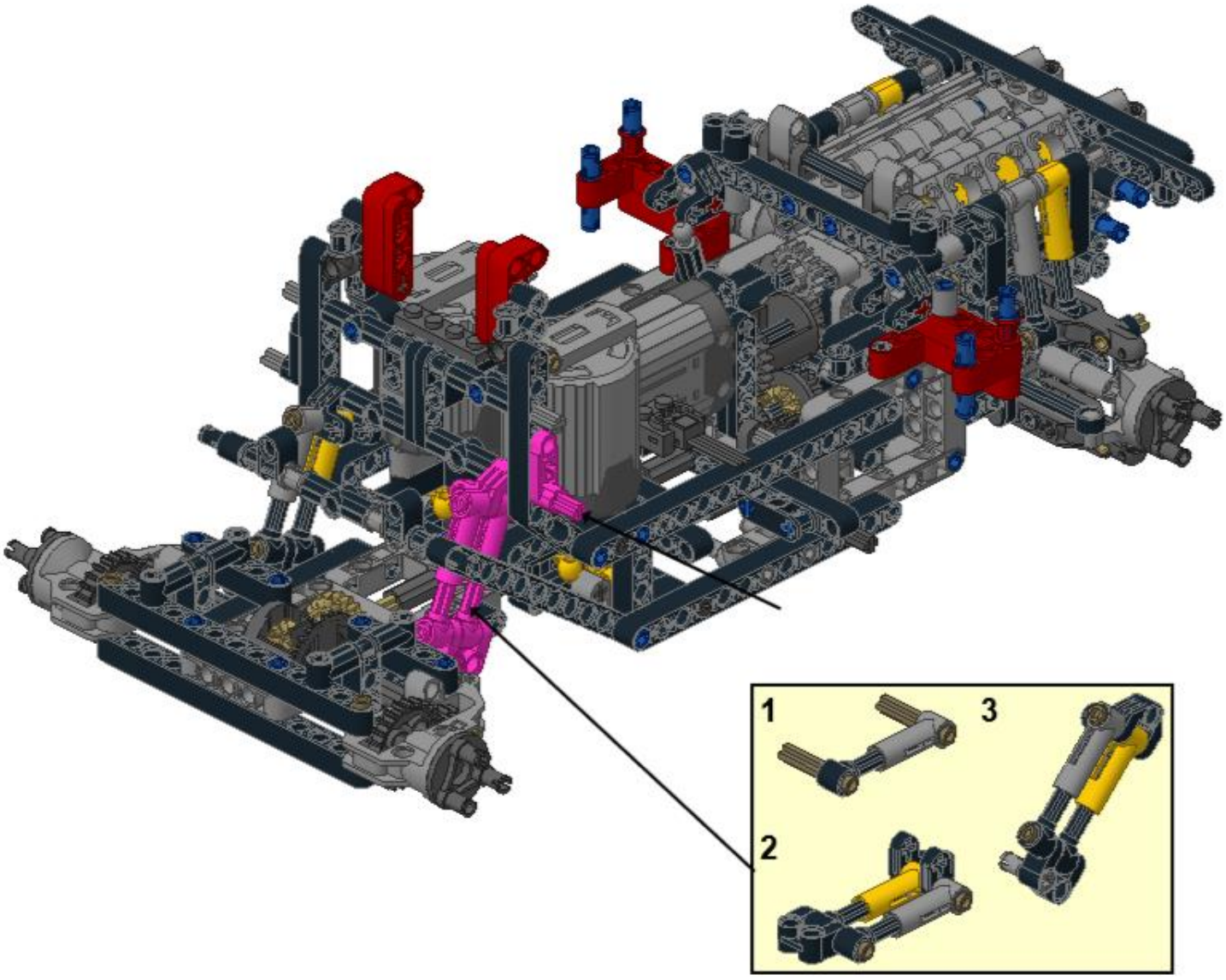

69

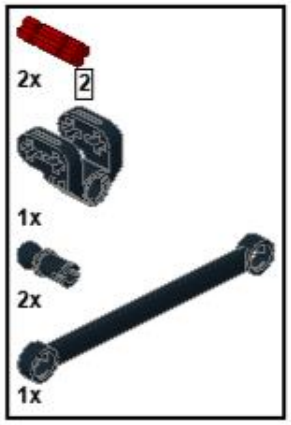

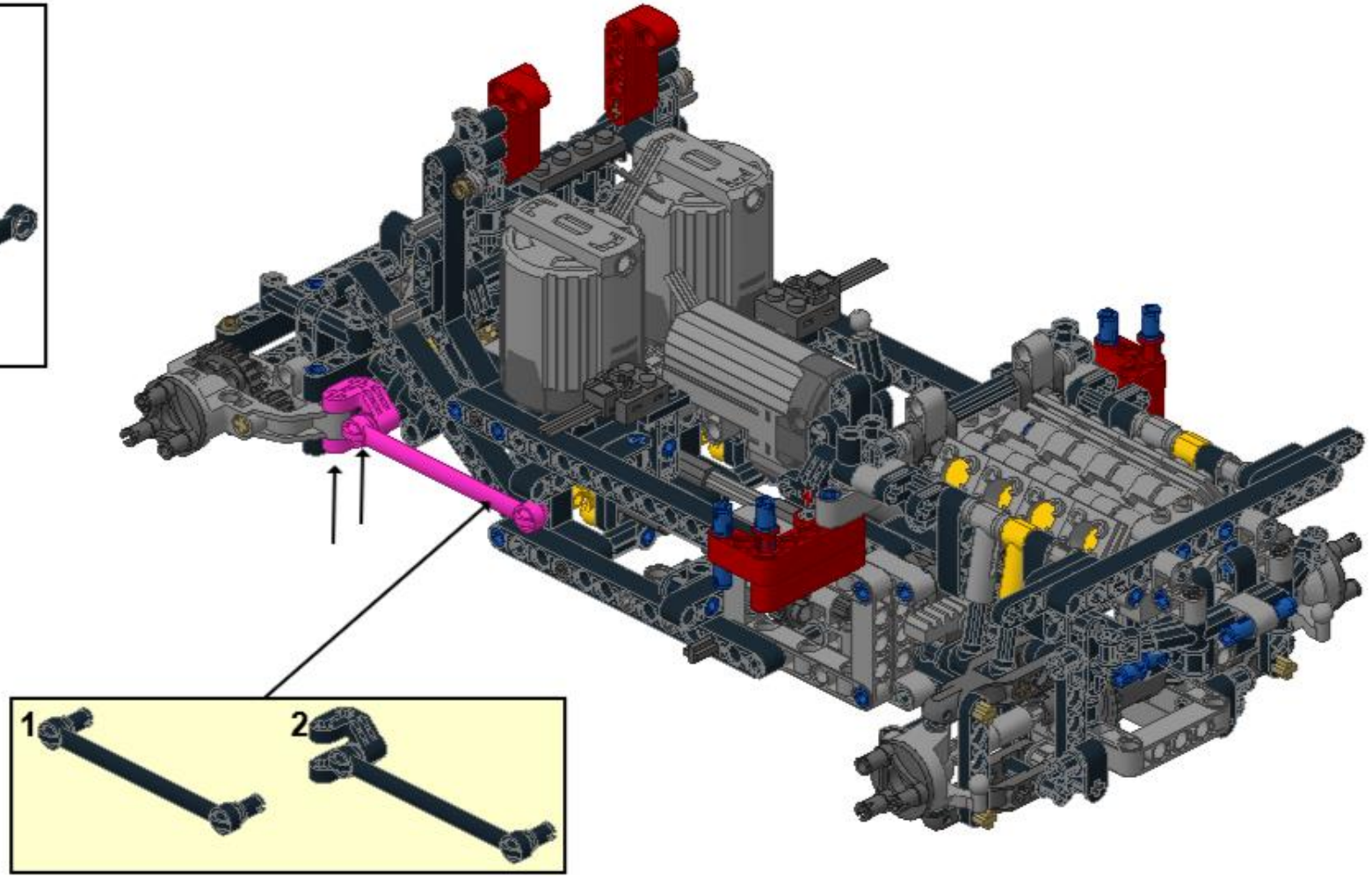

70

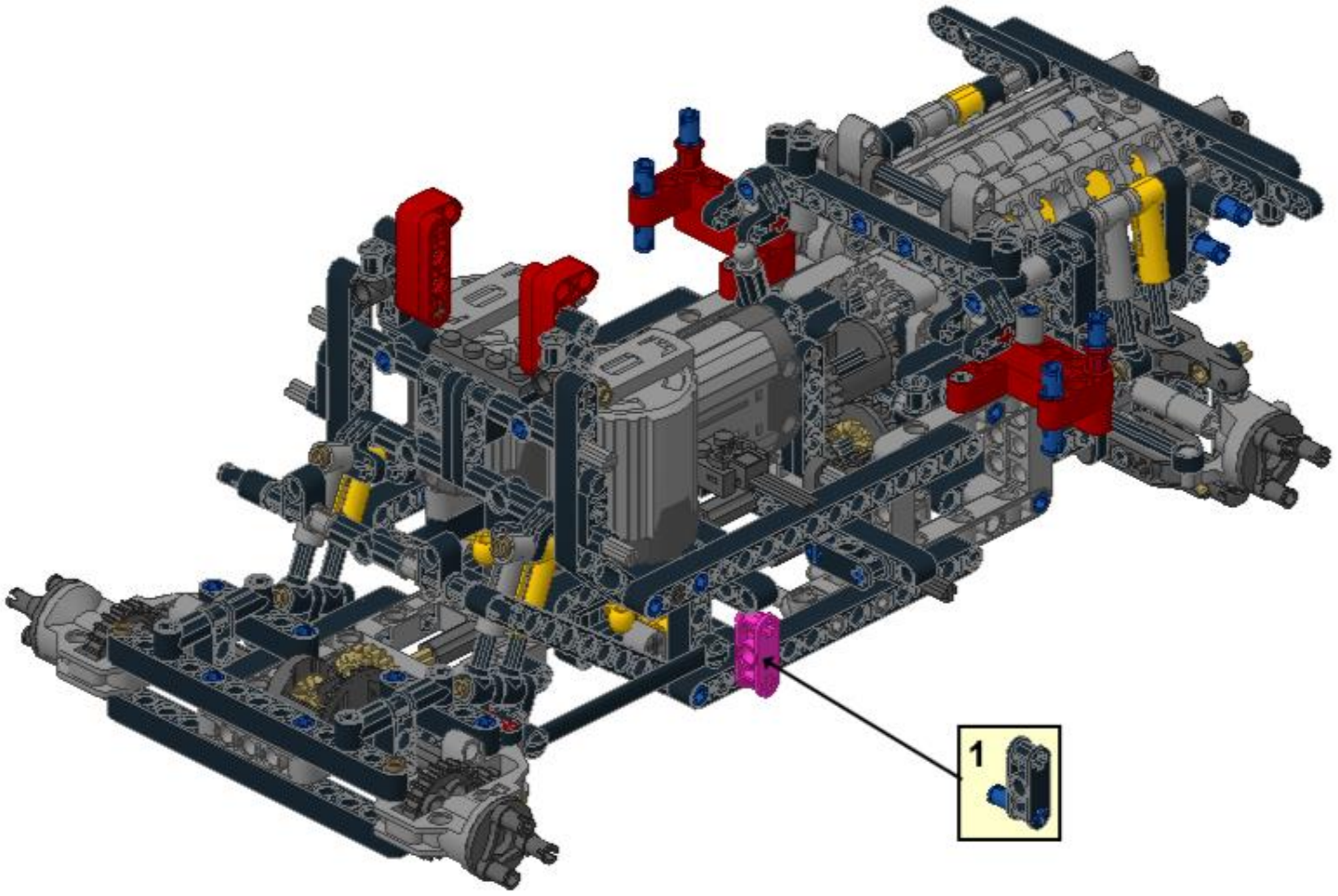

71

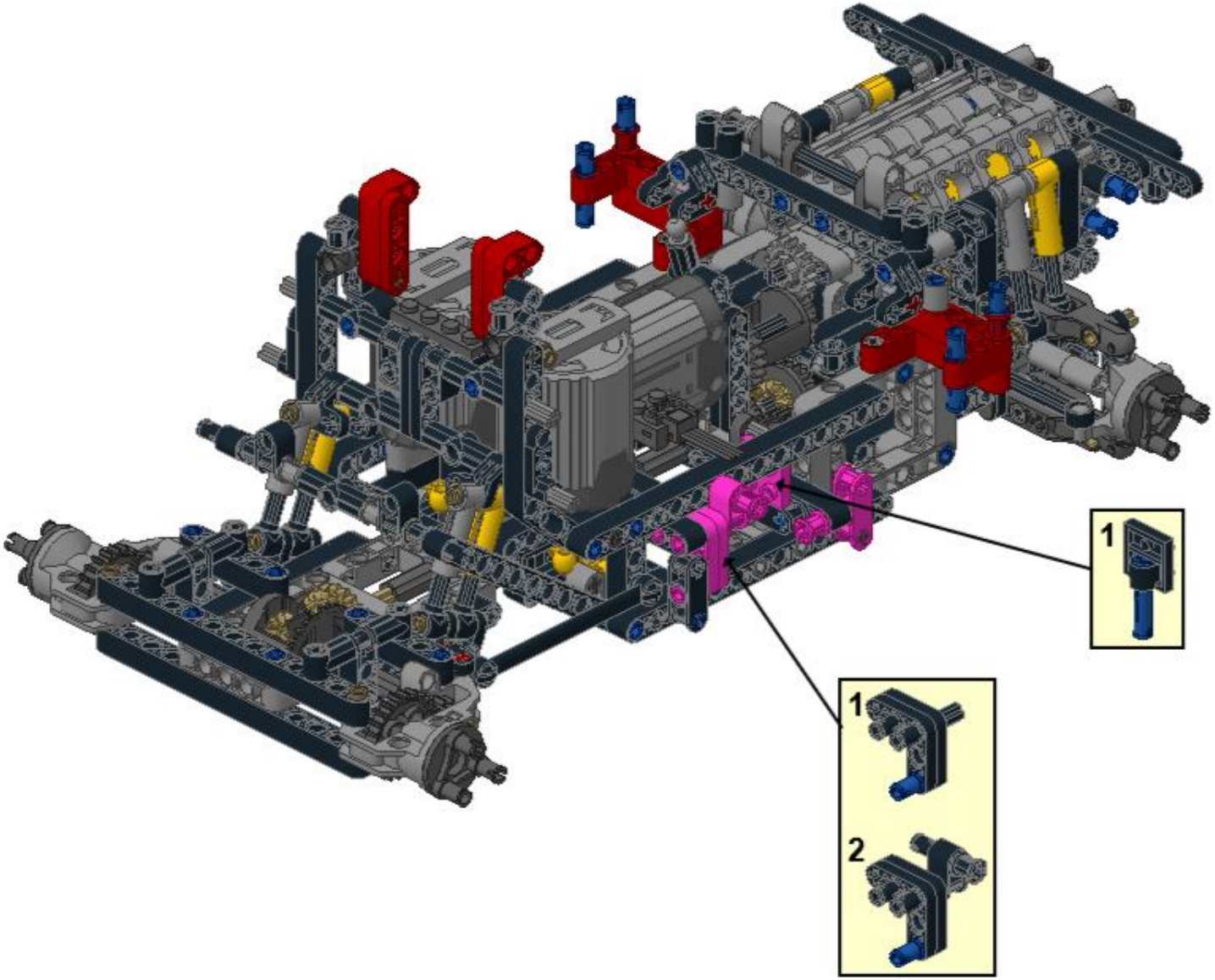

72

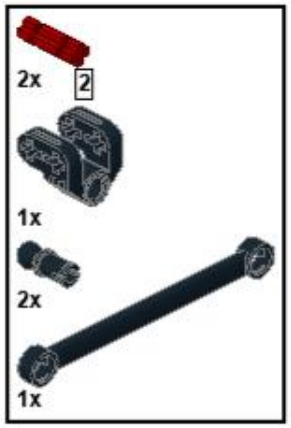

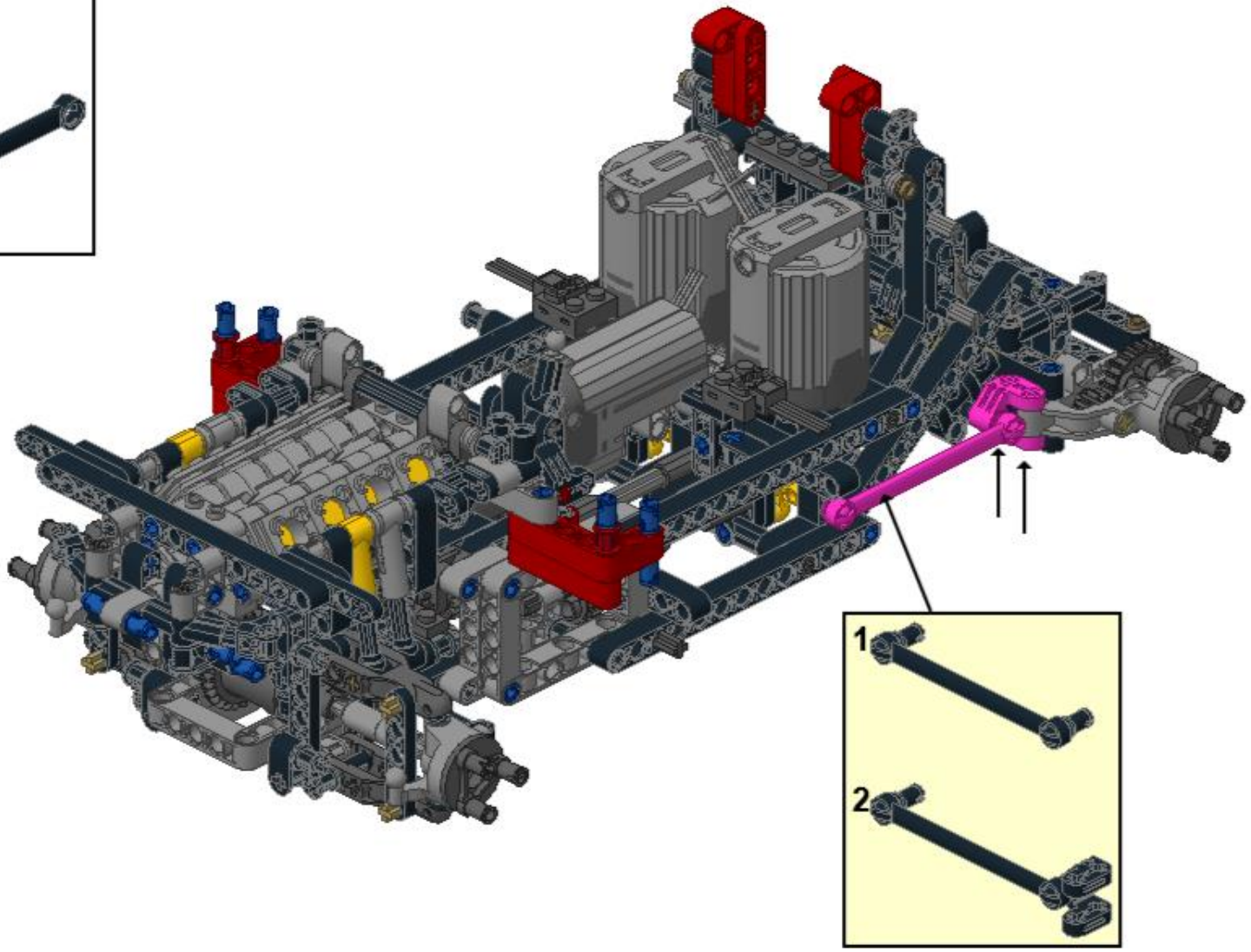

73

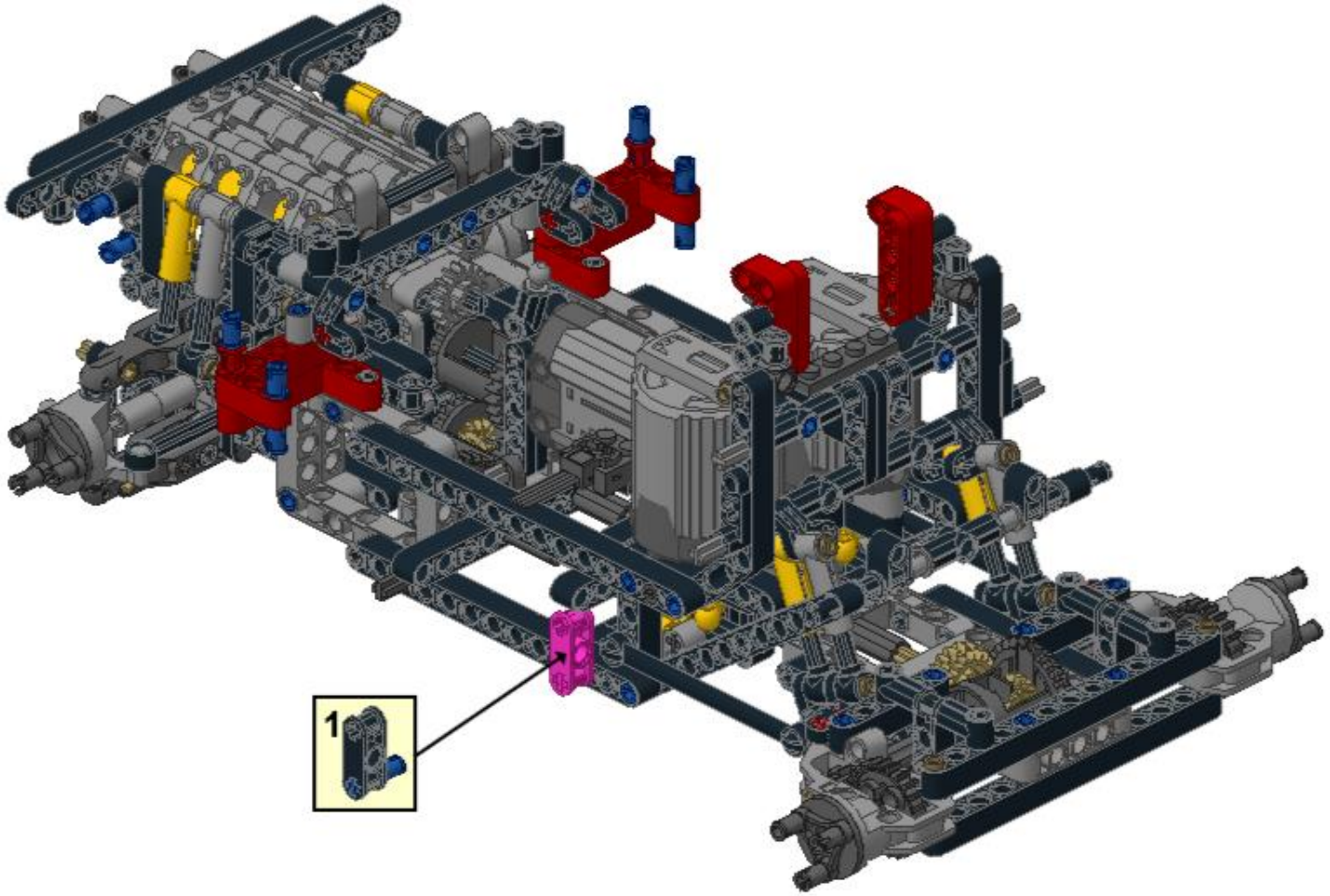

74

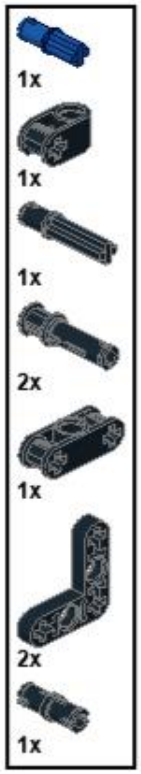

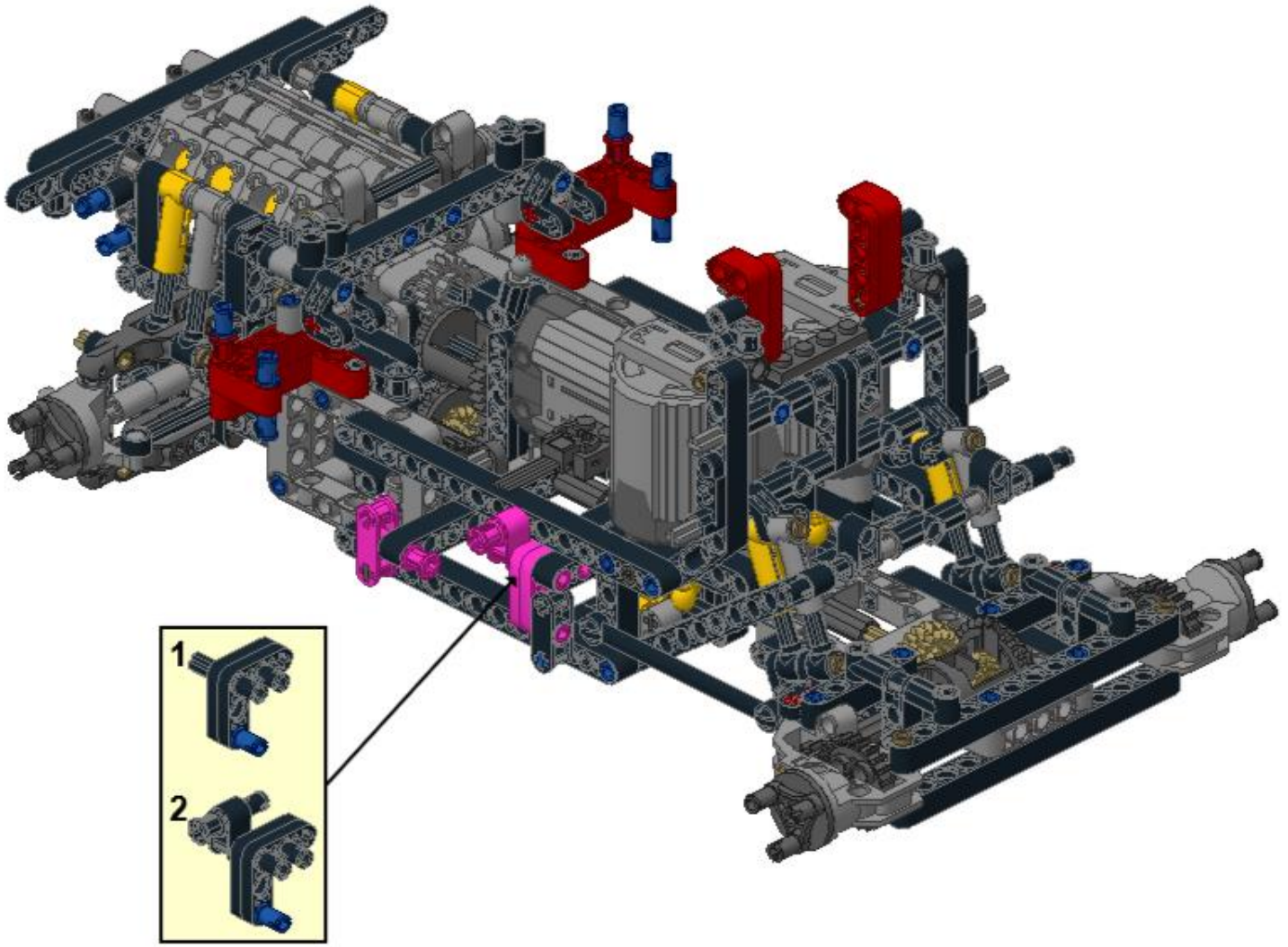

75

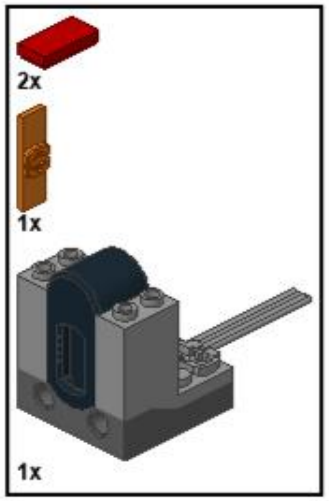

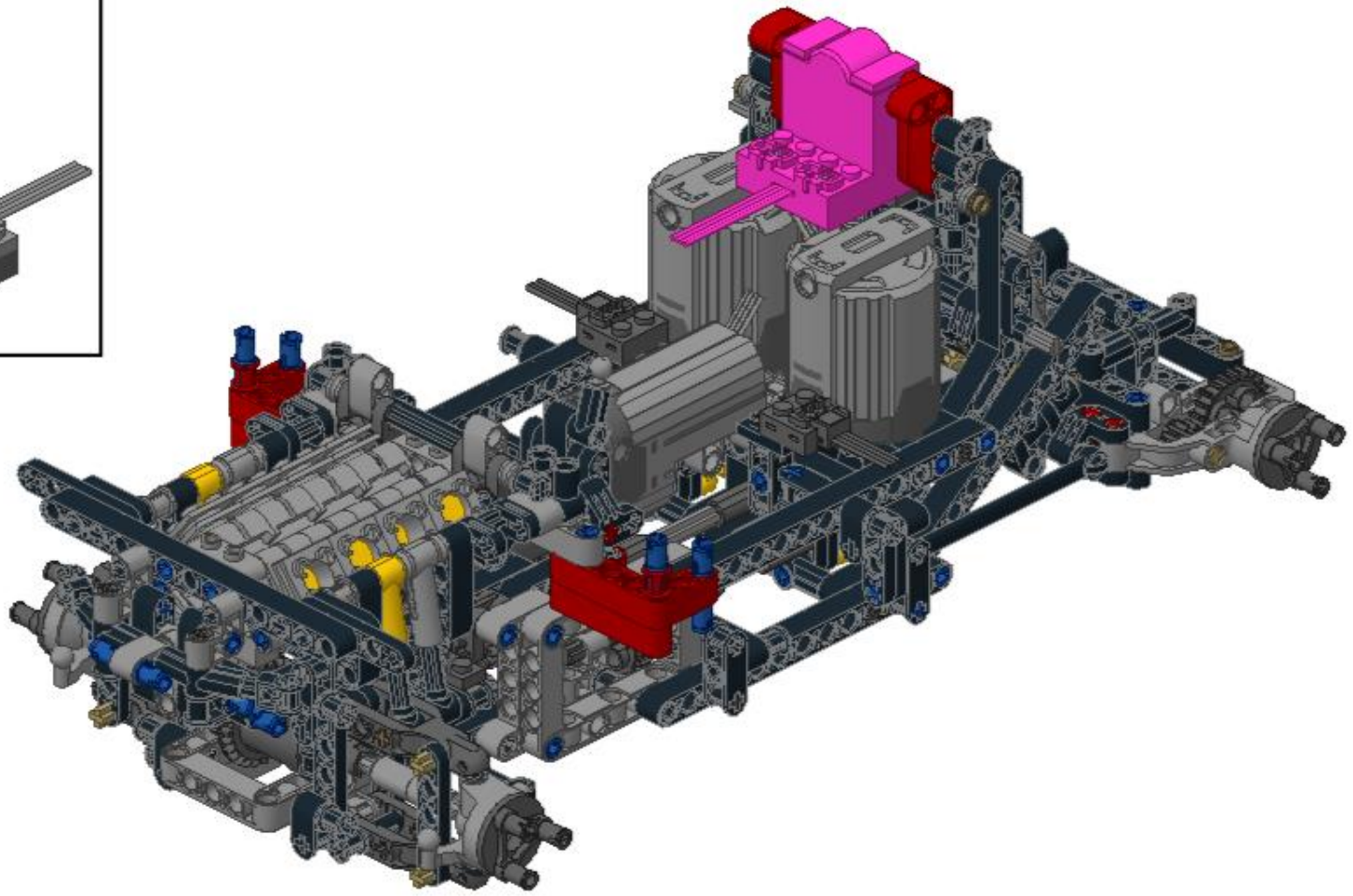

76

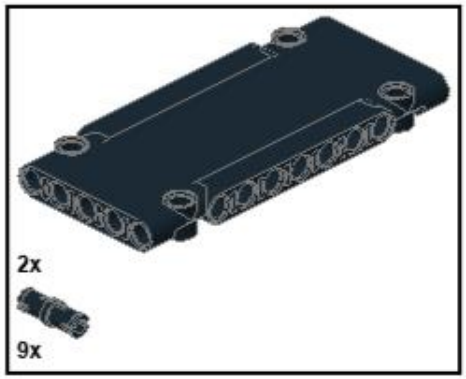

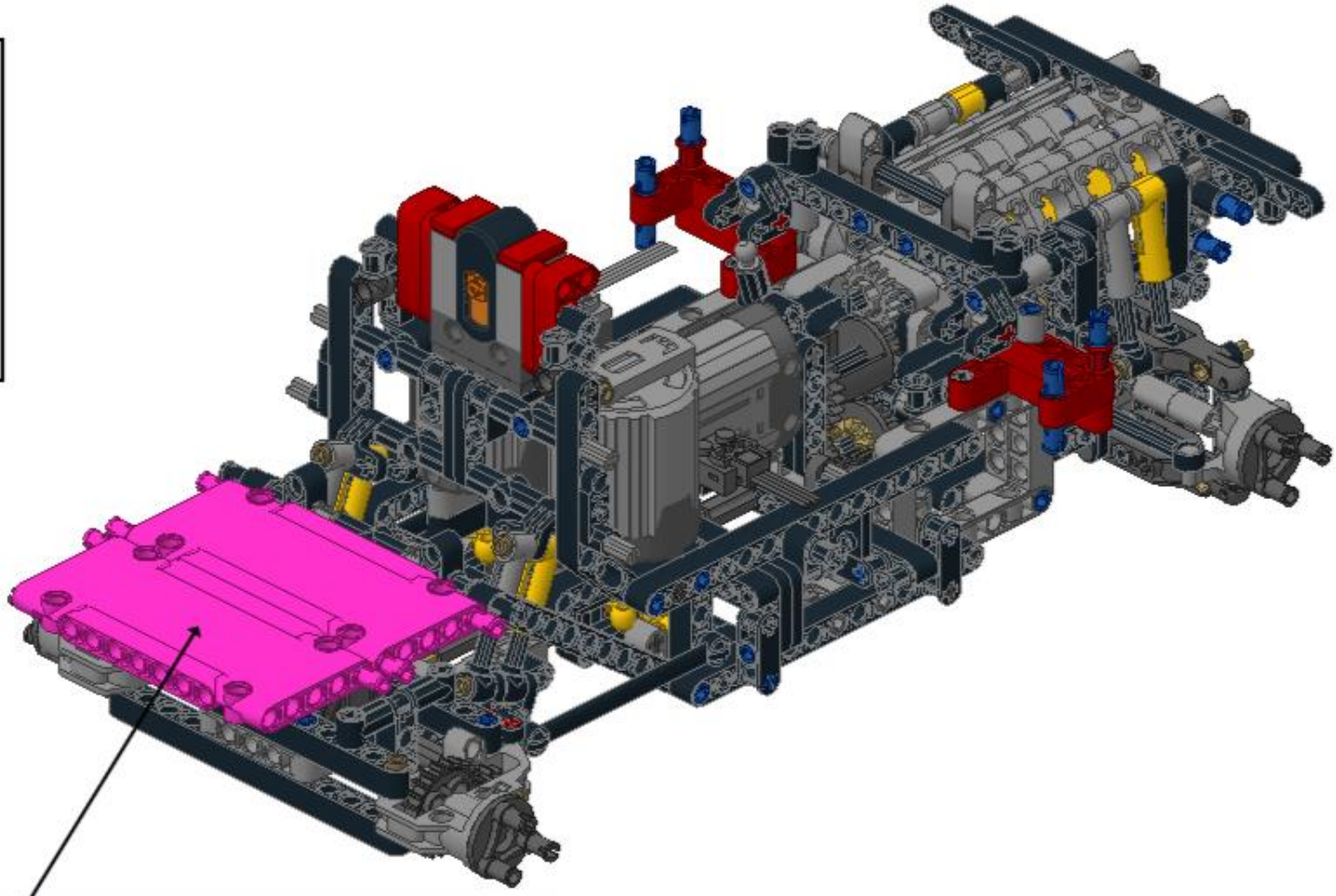

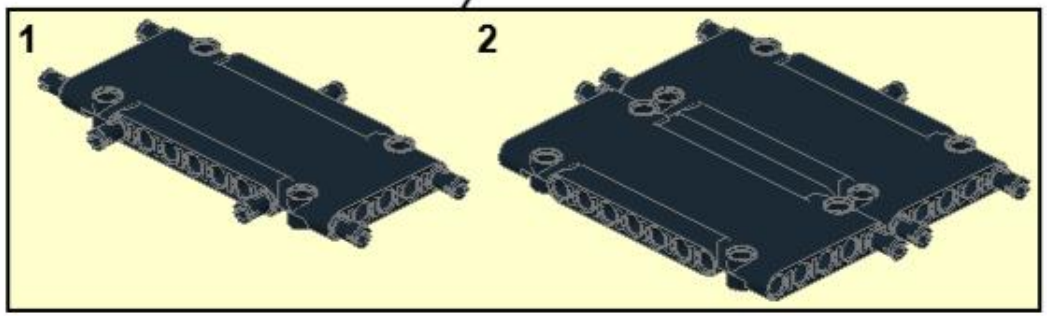

©jokey02

77

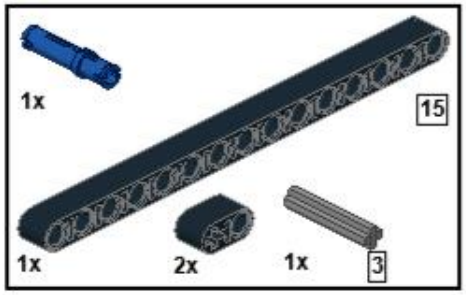

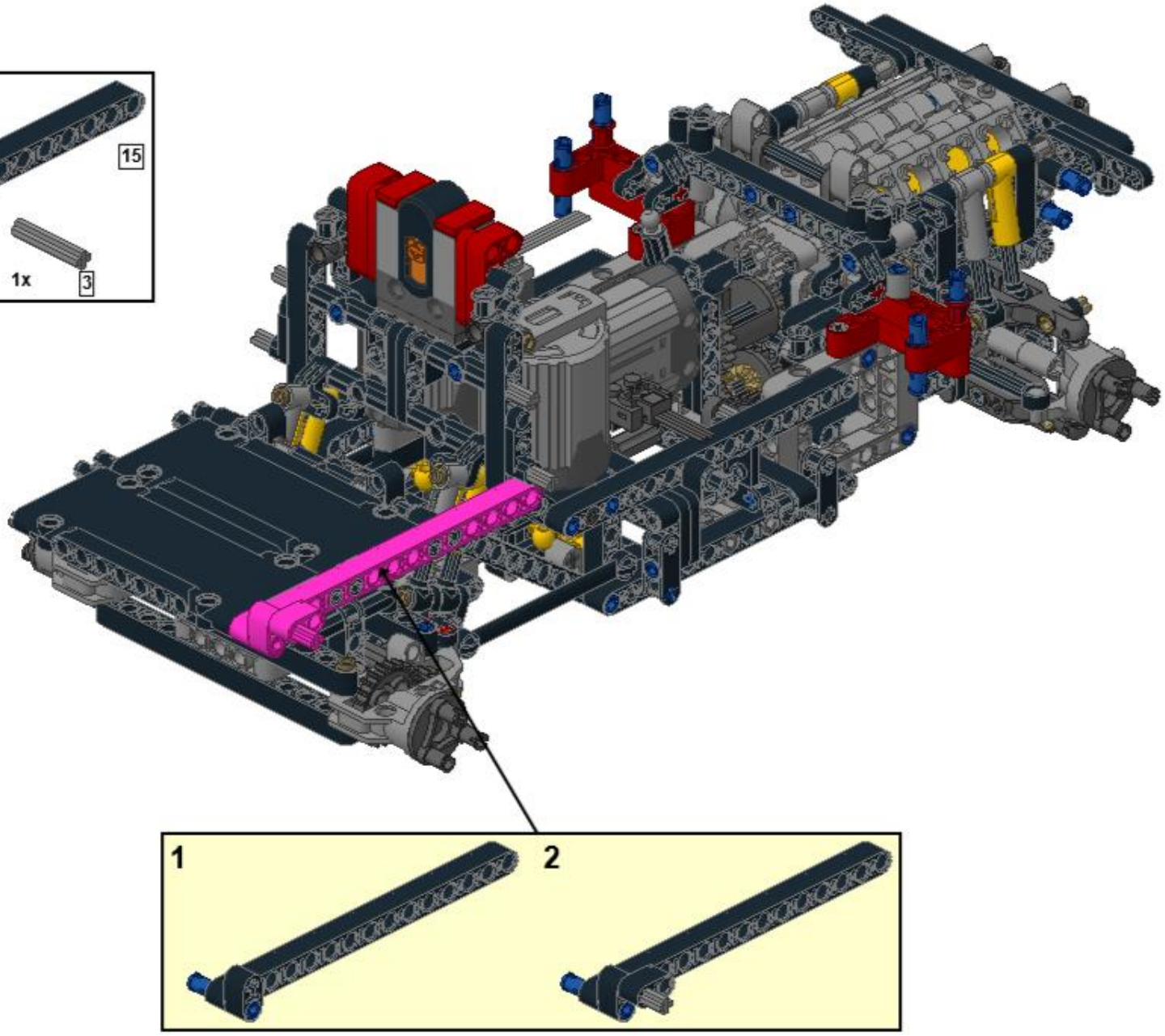

78

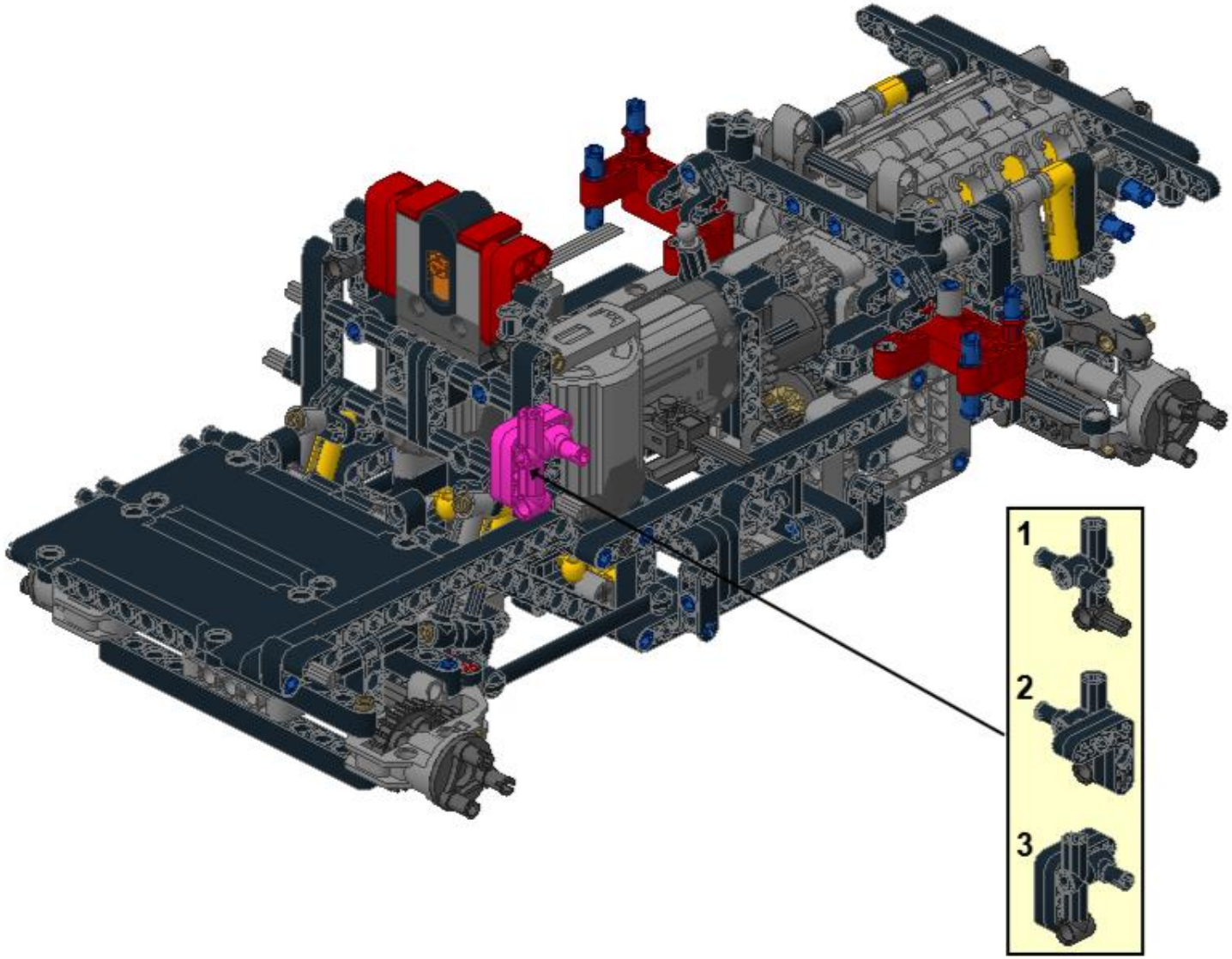

1

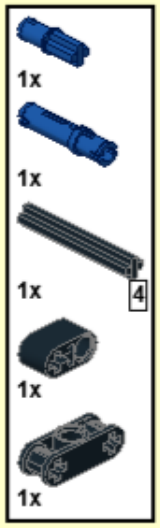

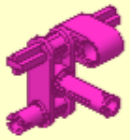

2

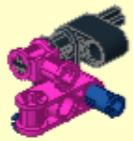

3

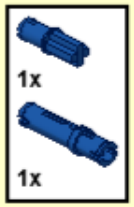

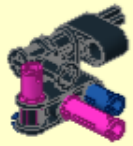

4

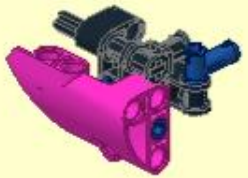

5

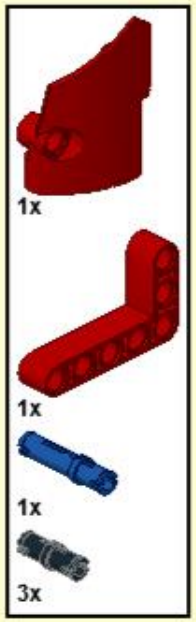

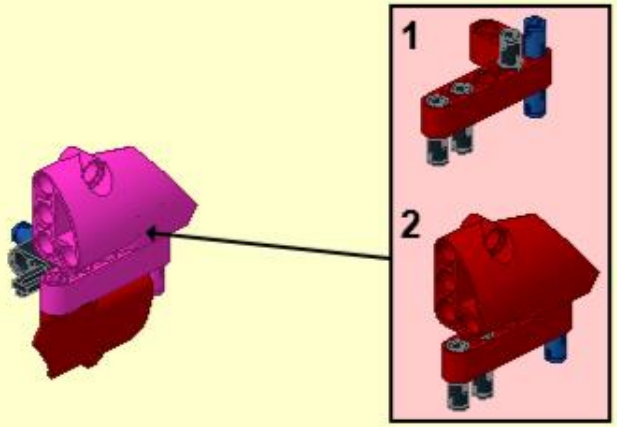

79

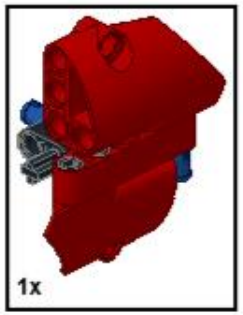

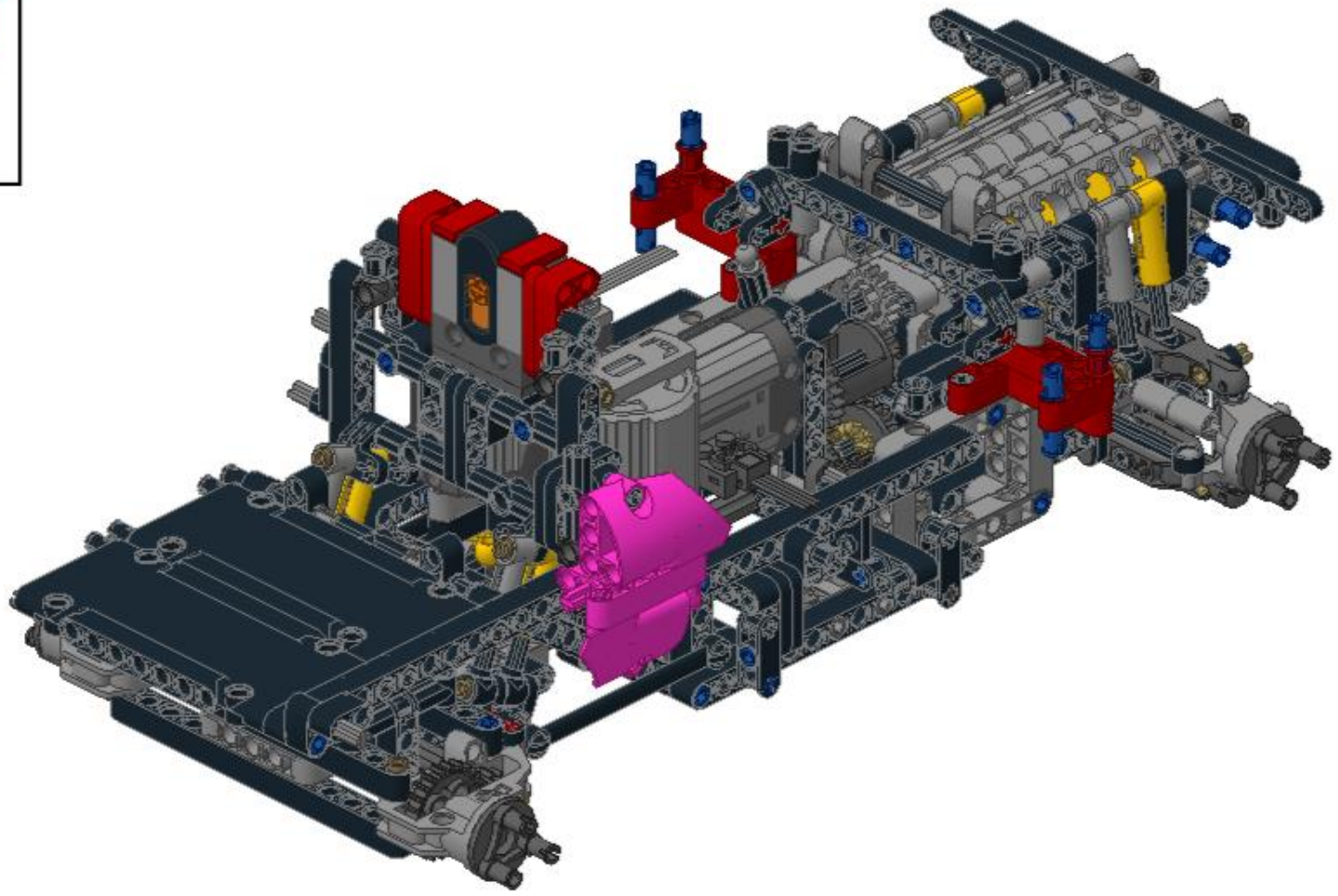

©jokey02

80

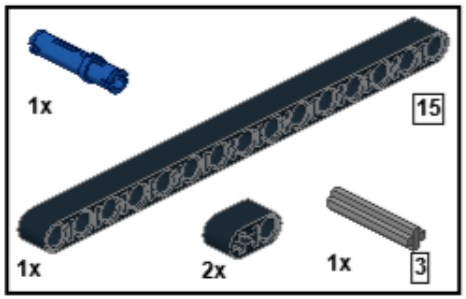

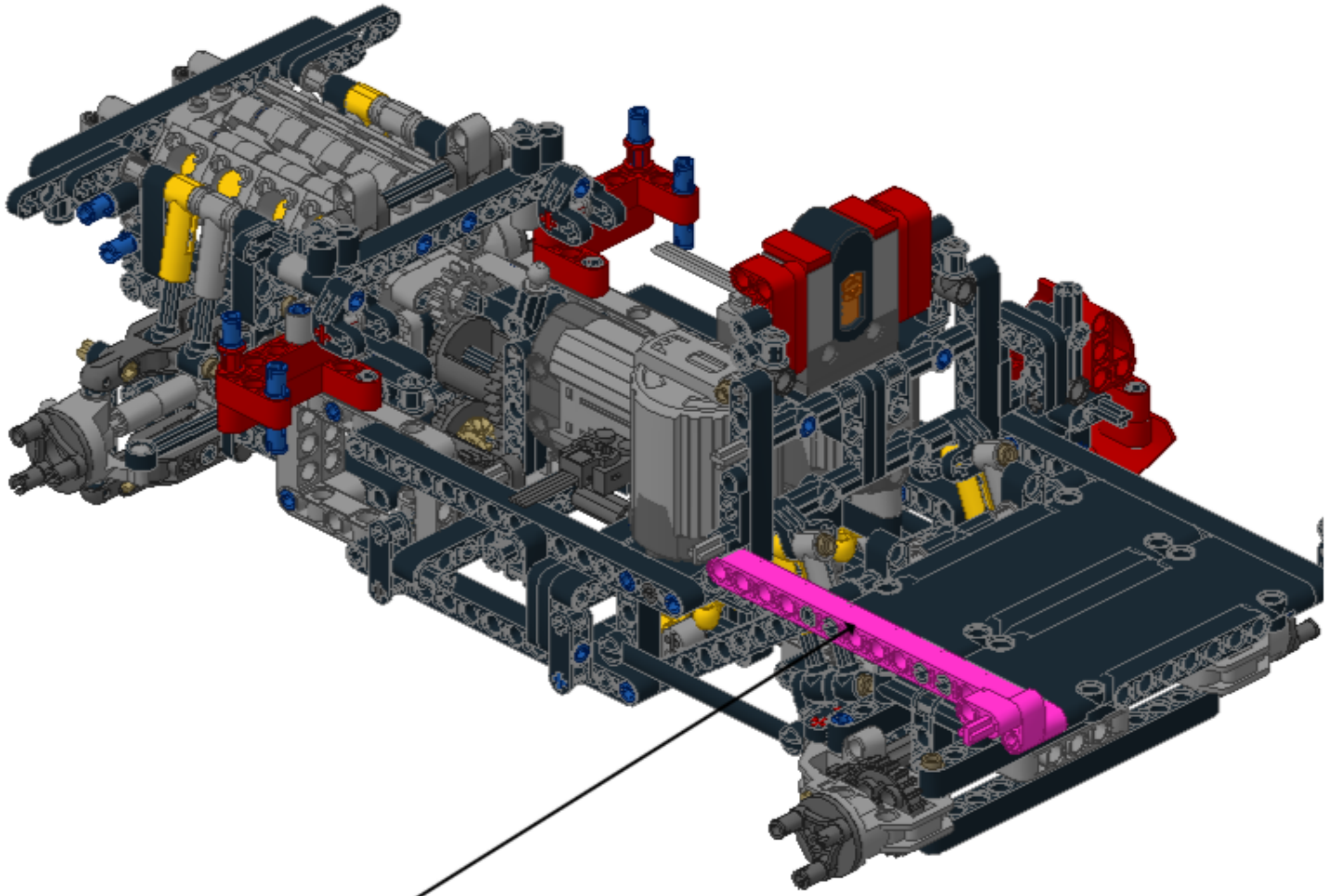

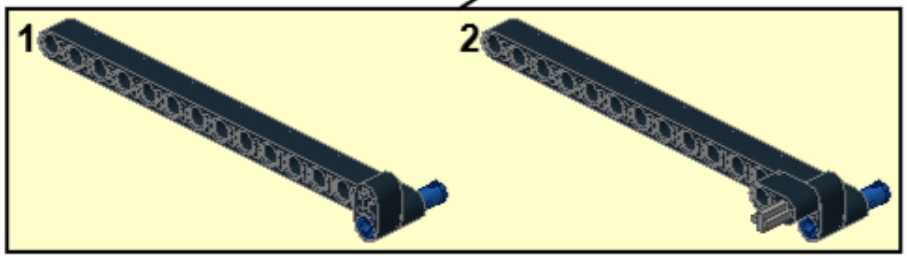

©jokey02

81

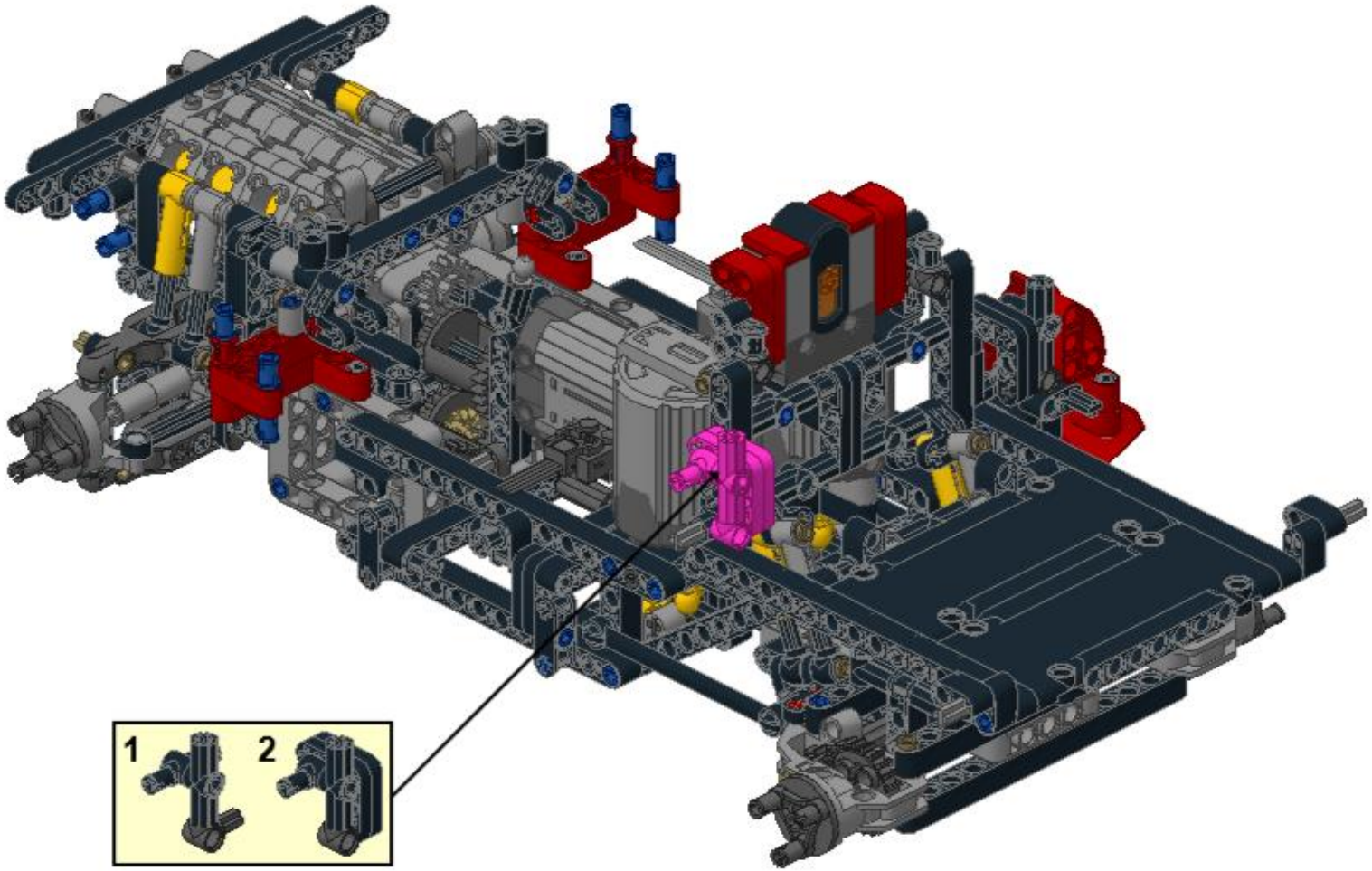

1

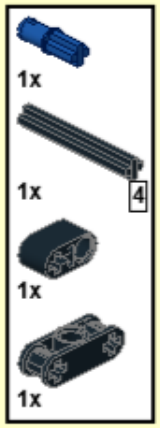

2

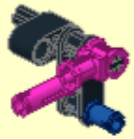

3

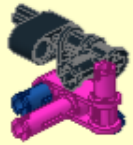

4

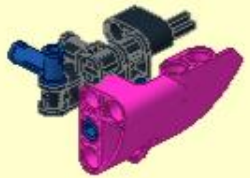

5

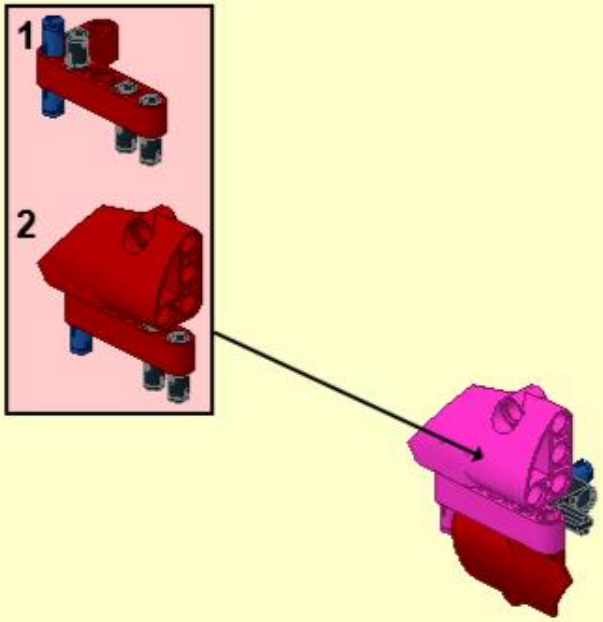

82

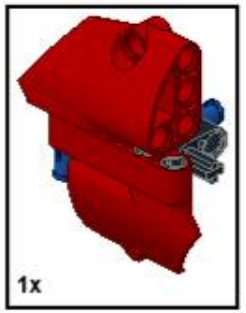

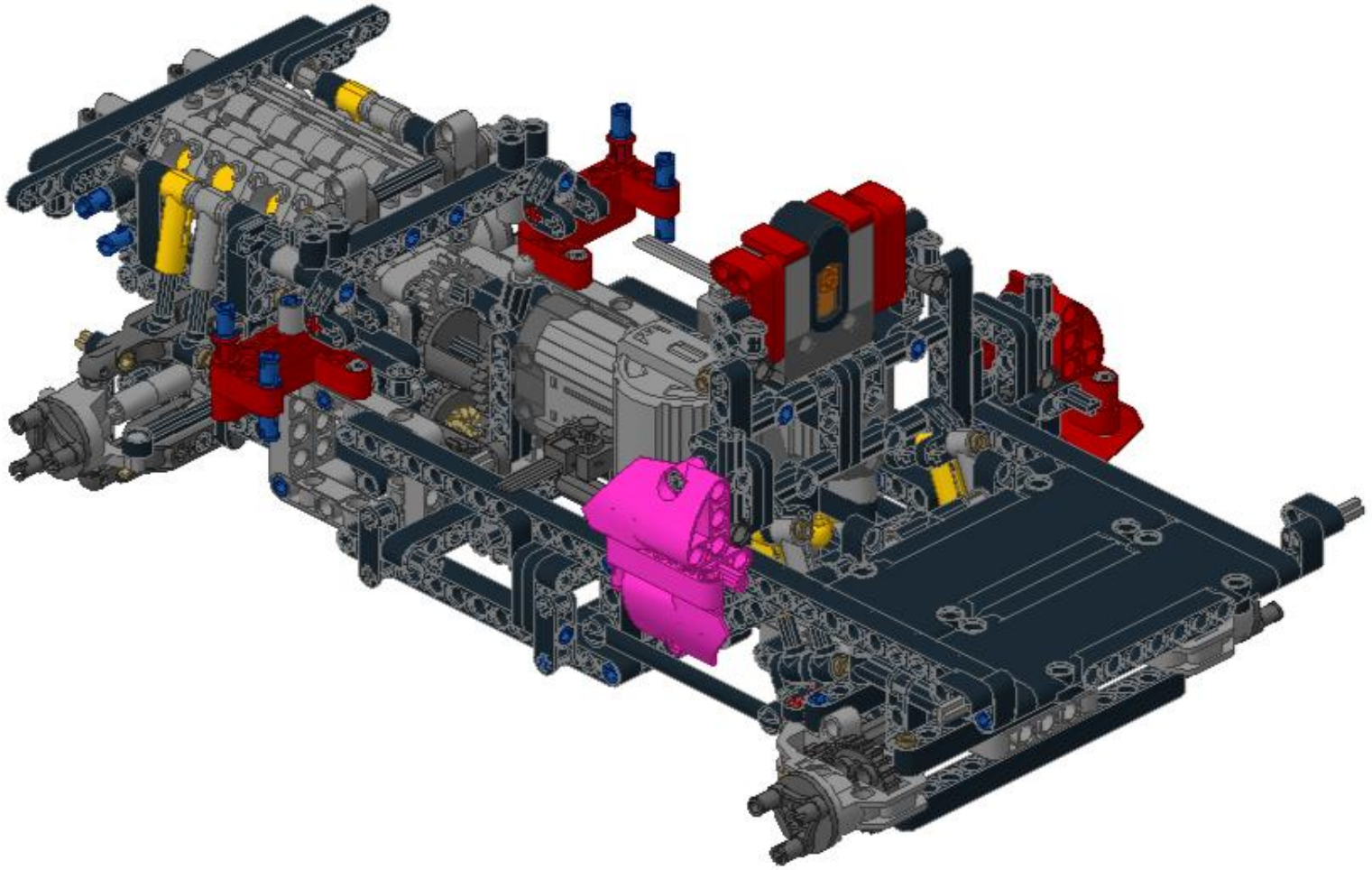

©jokey02

83

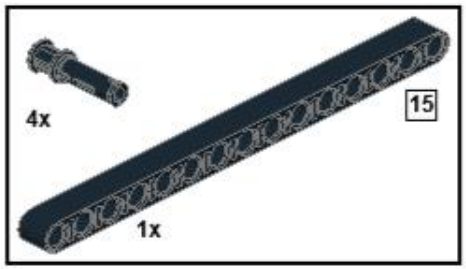

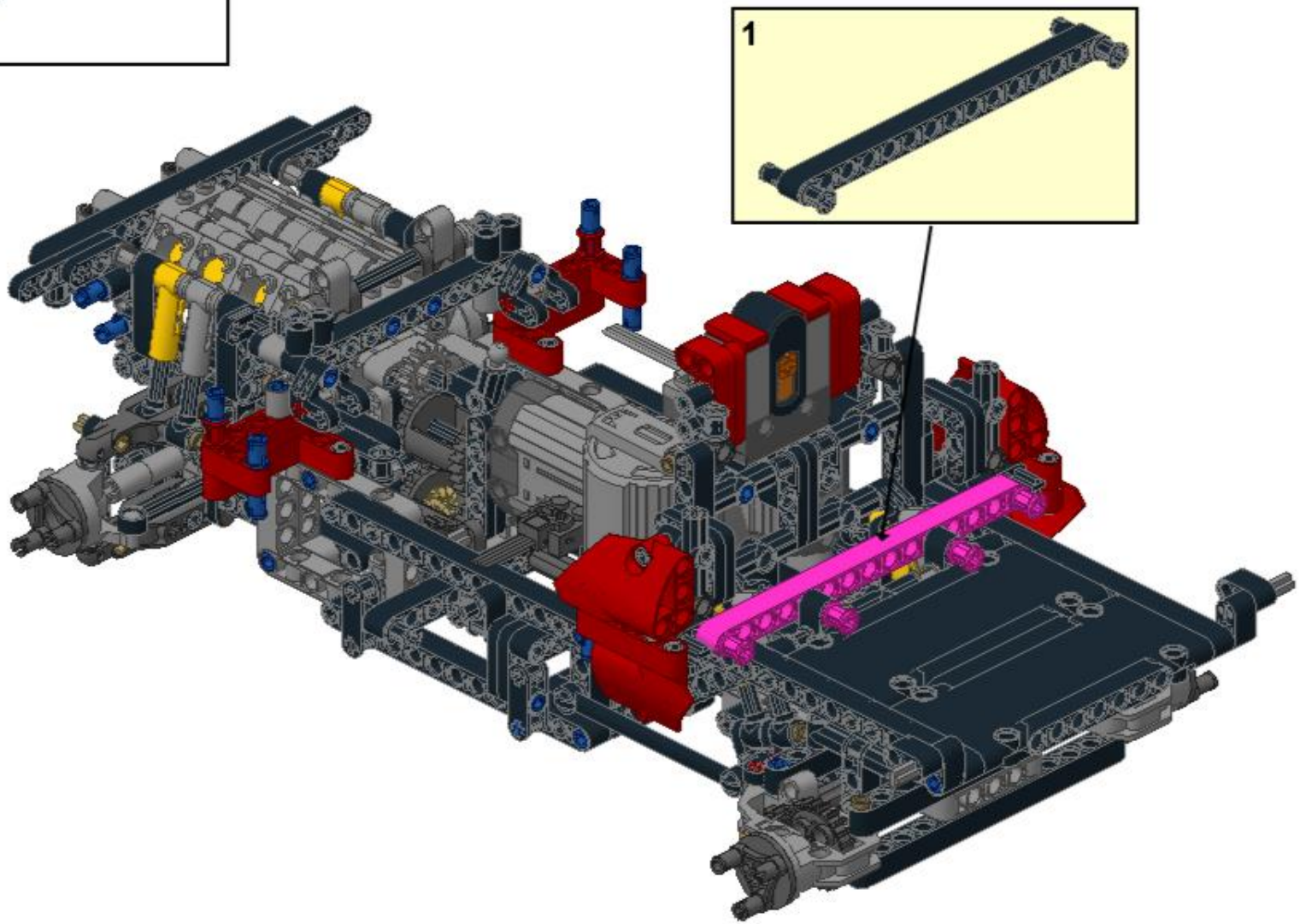

84

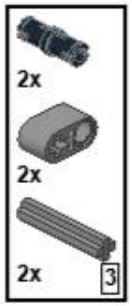

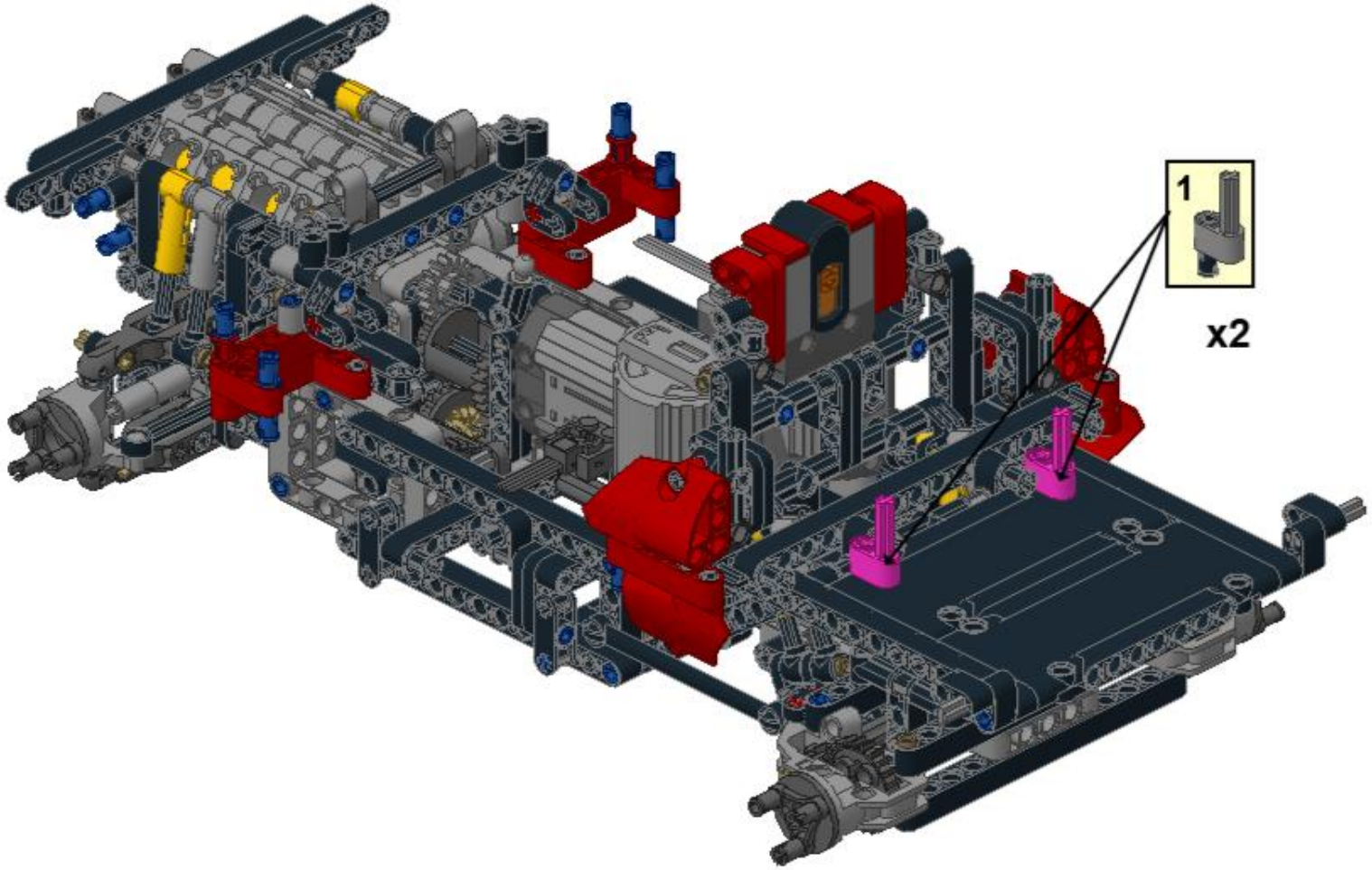

85

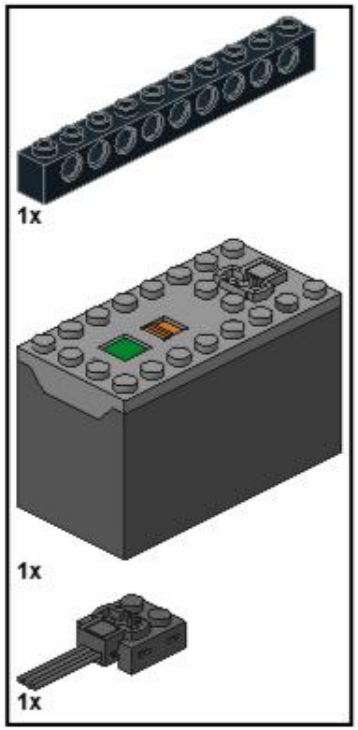

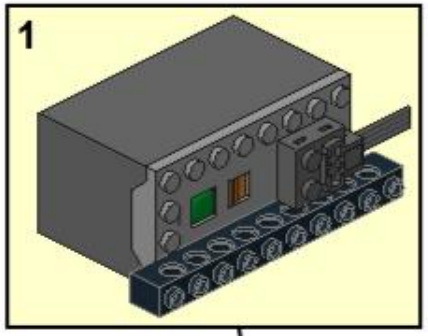

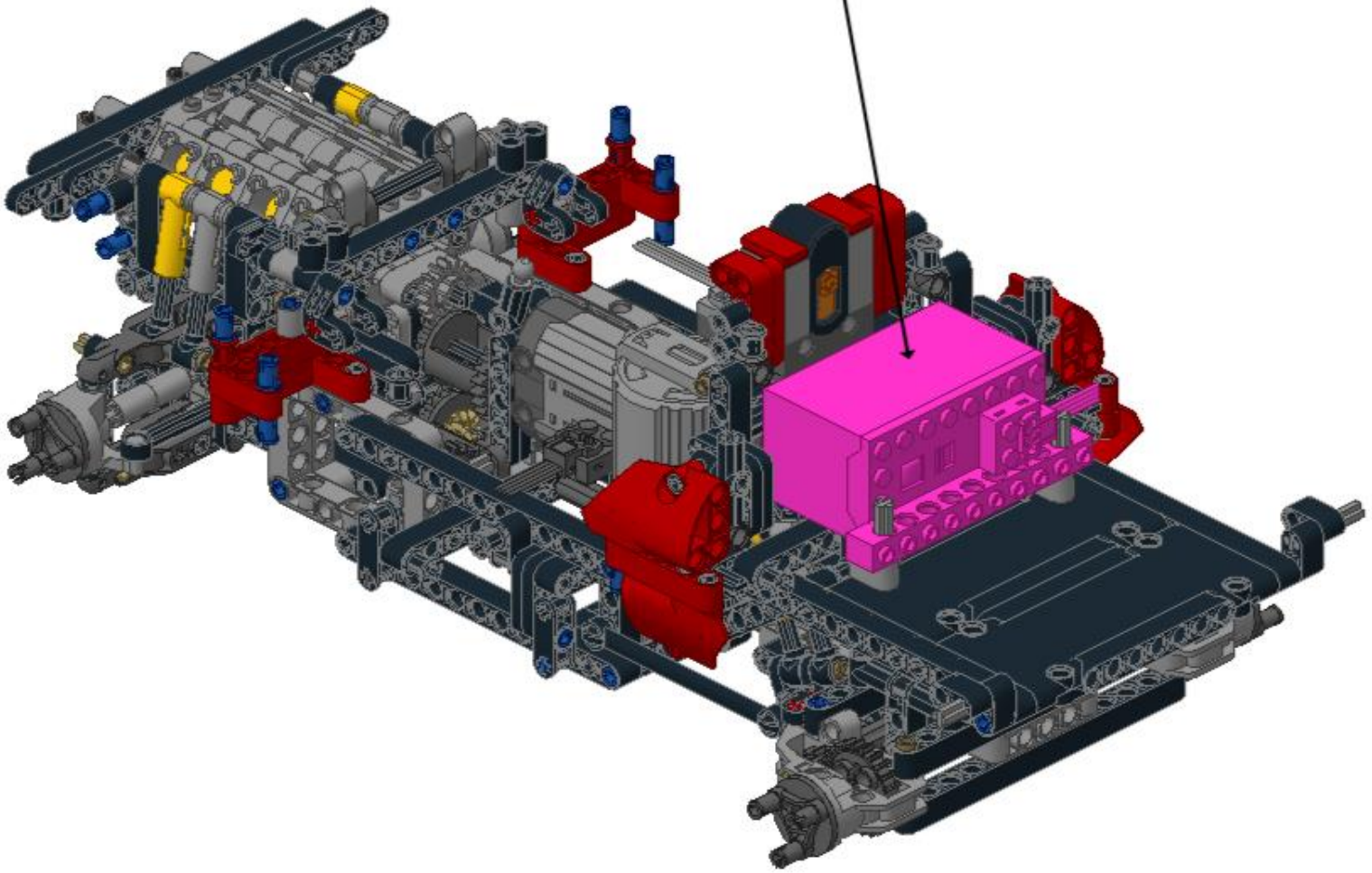

86

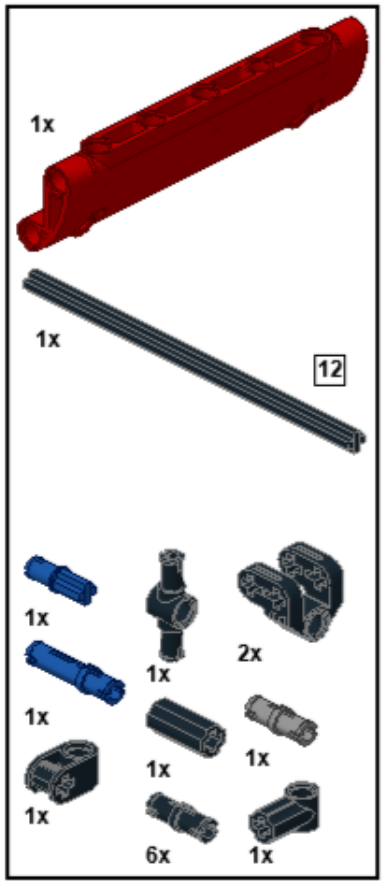

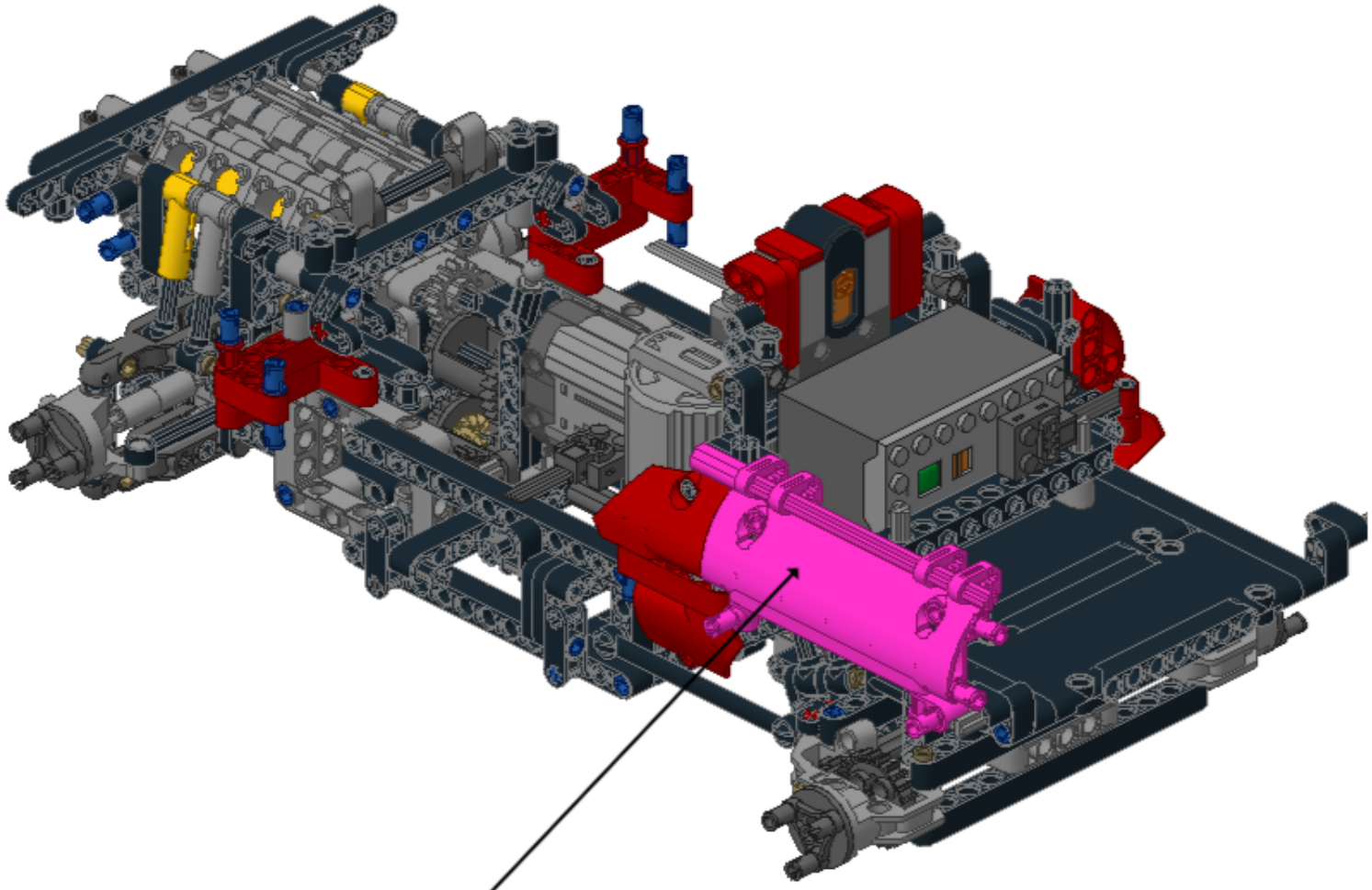

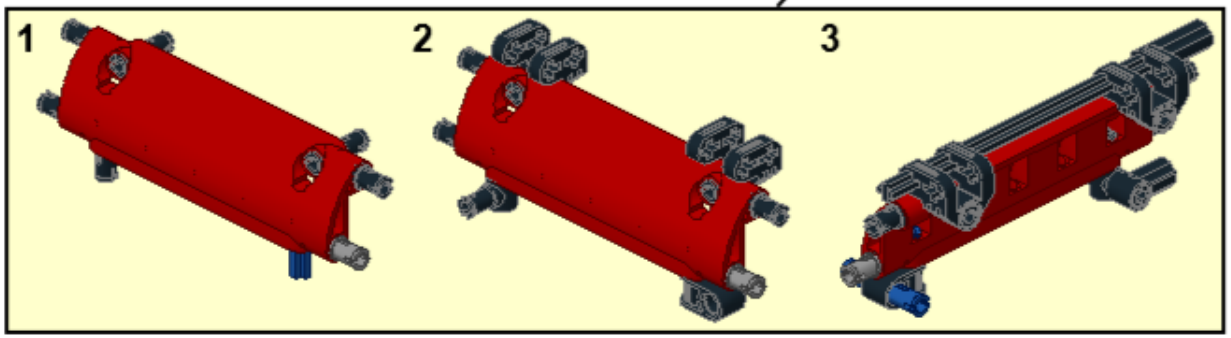

©jokey02

87

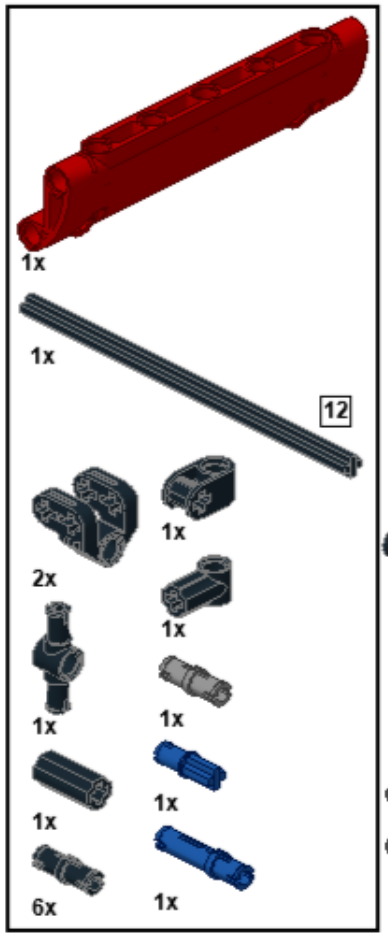

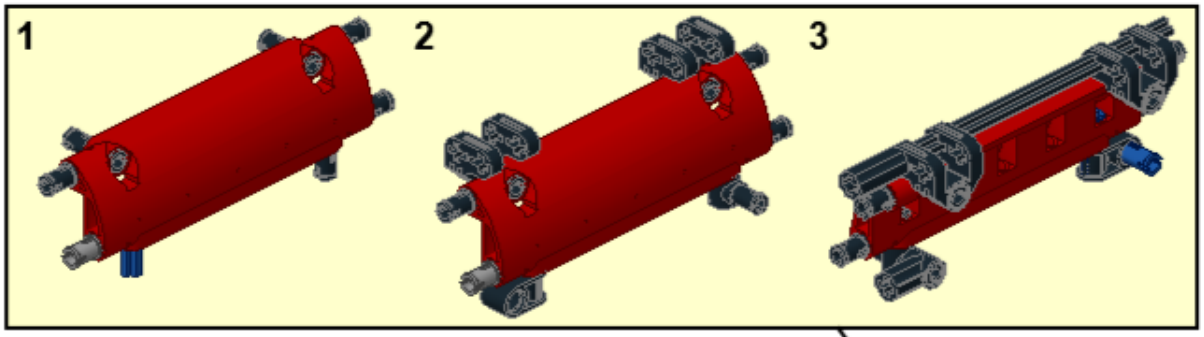

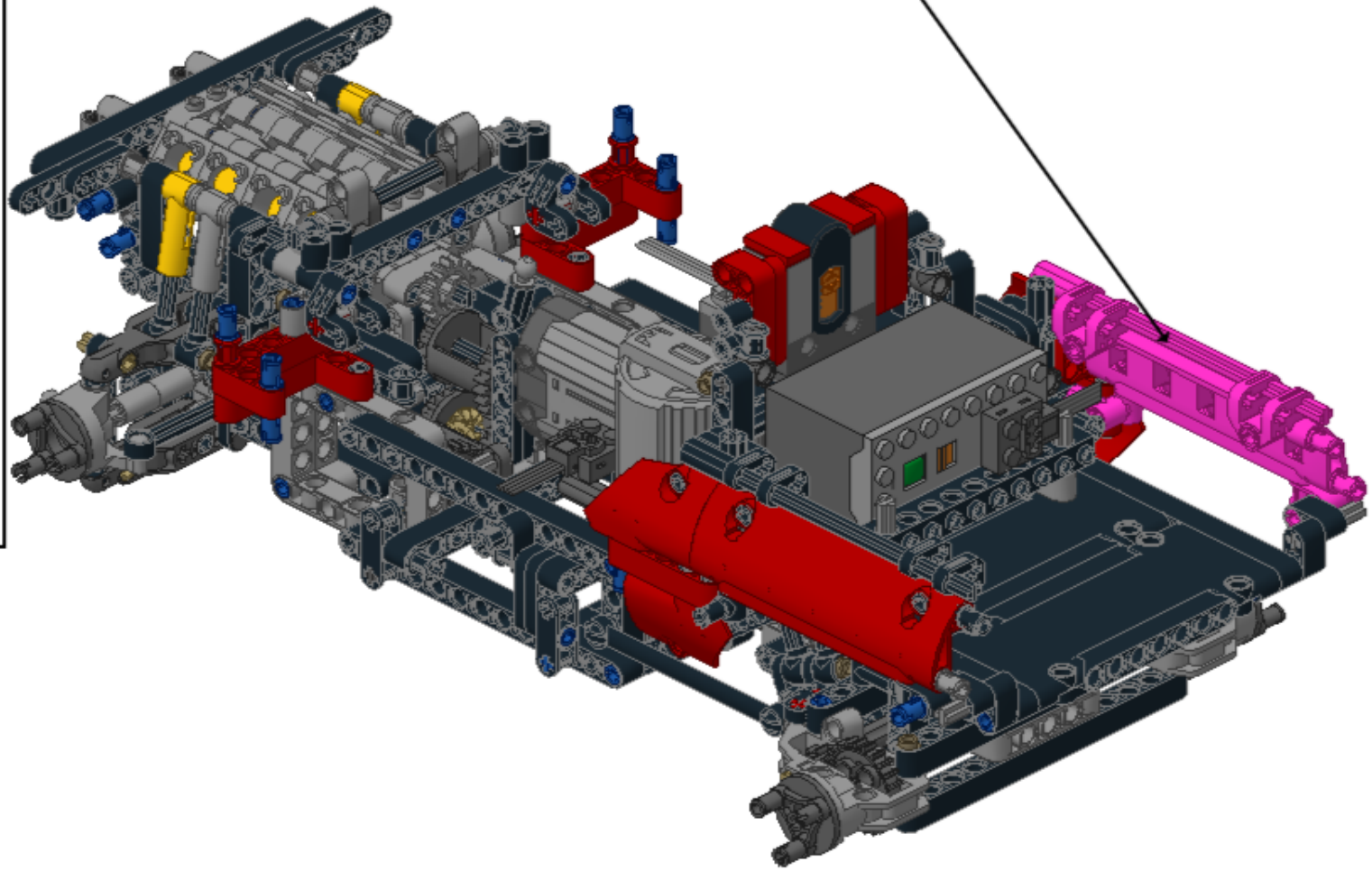

1

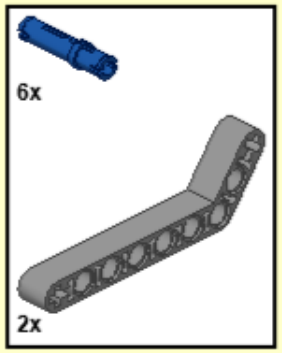

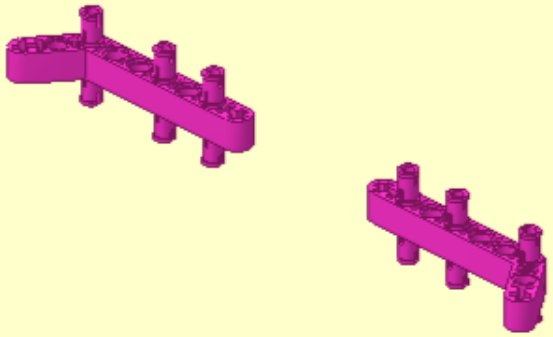

2

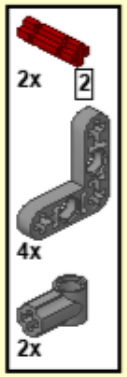

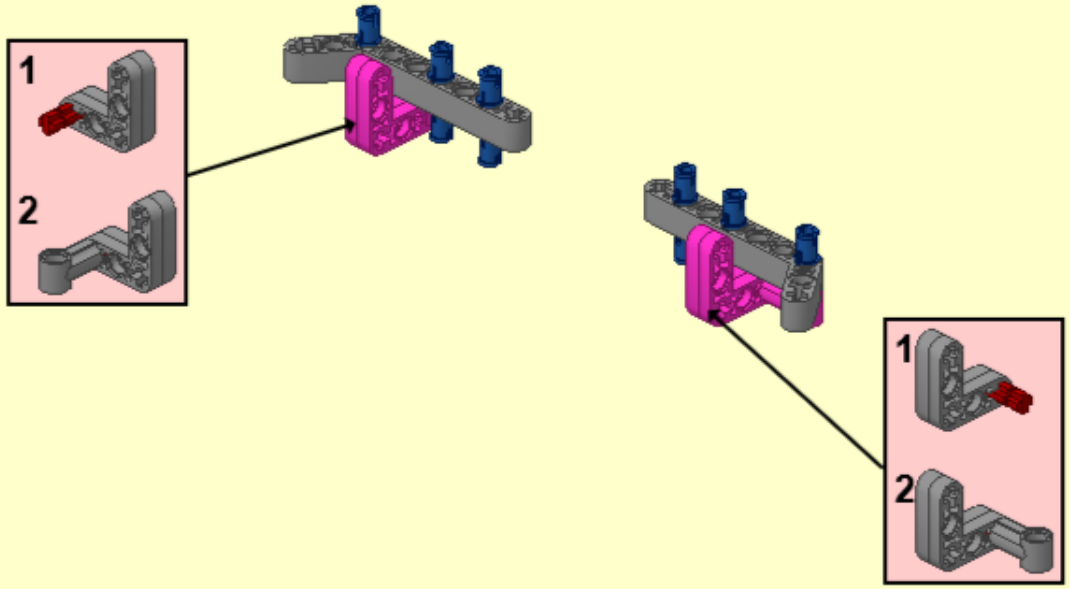

3

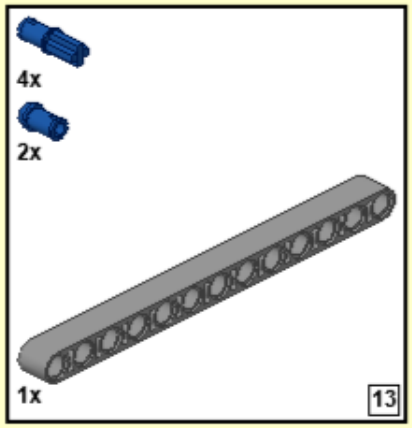

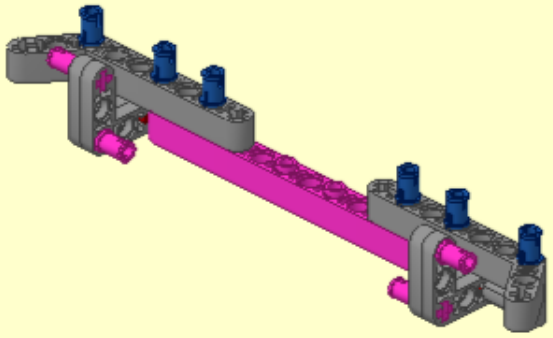

4

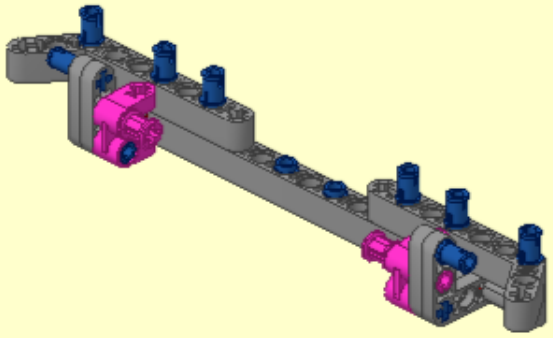

©jokey02

5

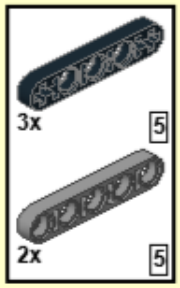

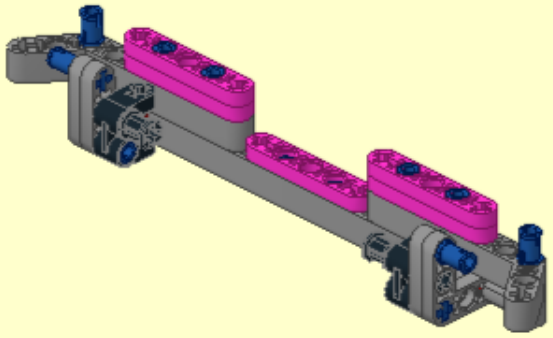

6

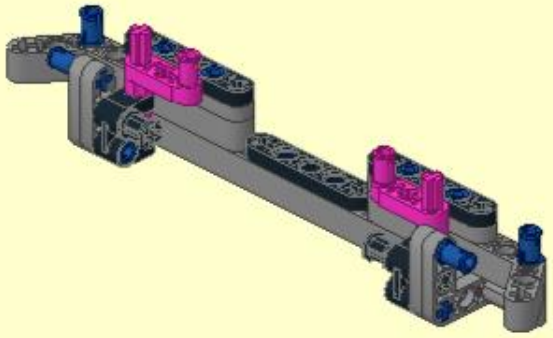

7

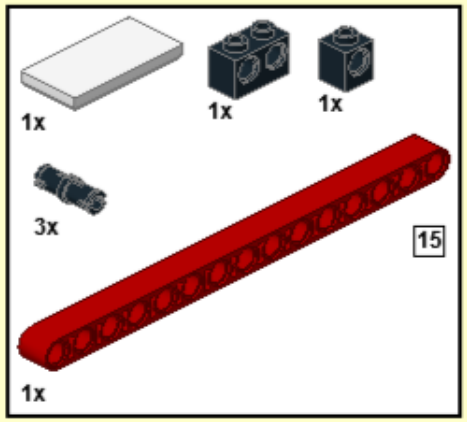

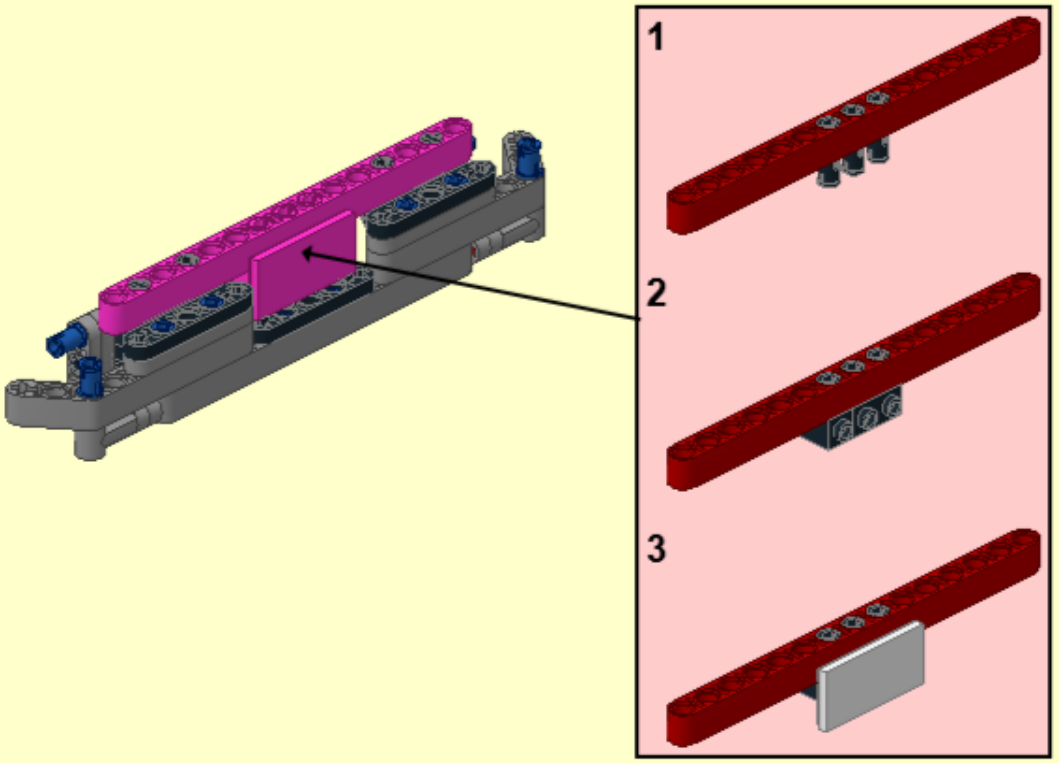

8

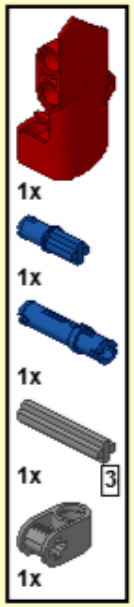

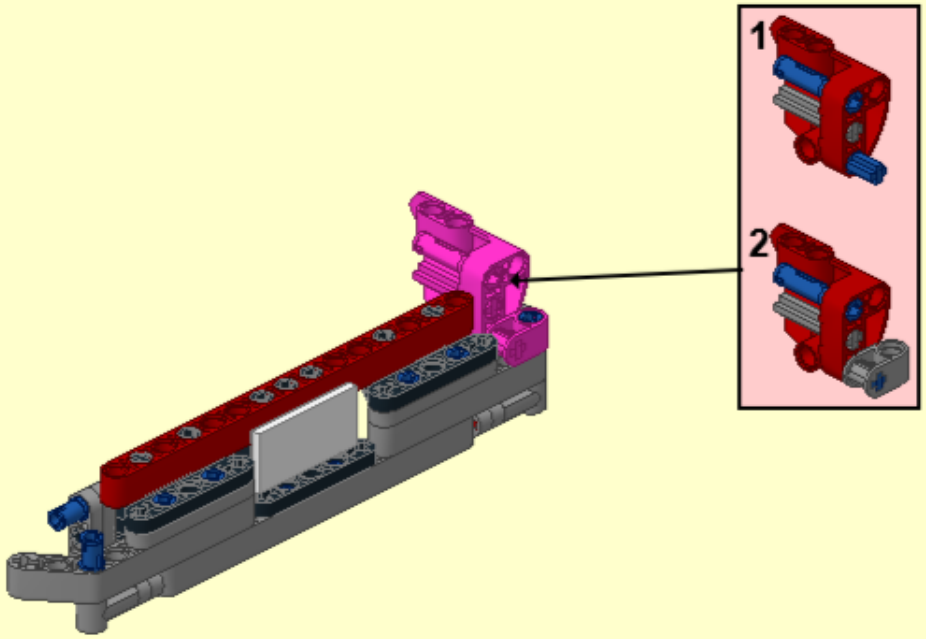

9

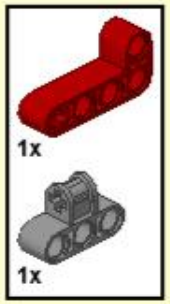

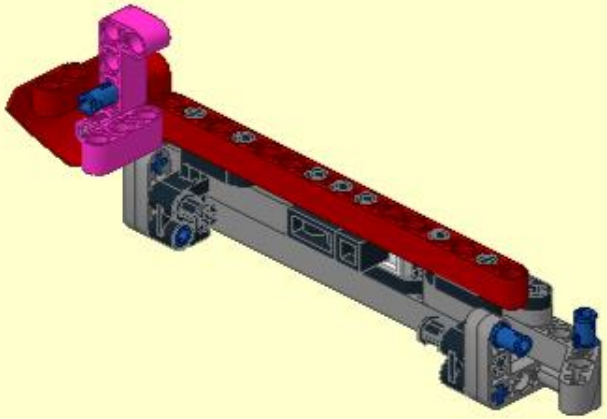

10

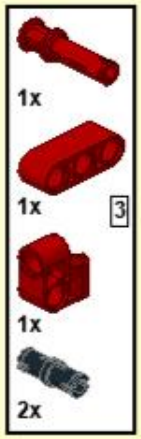

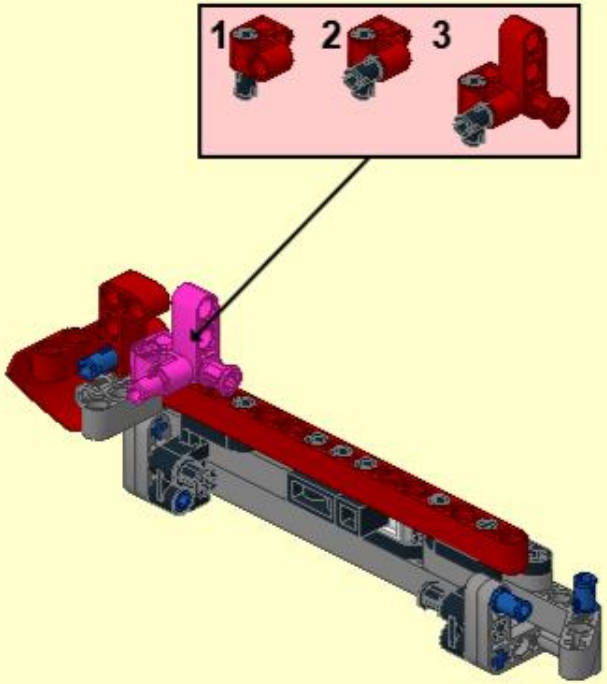

11

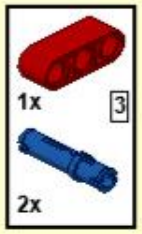

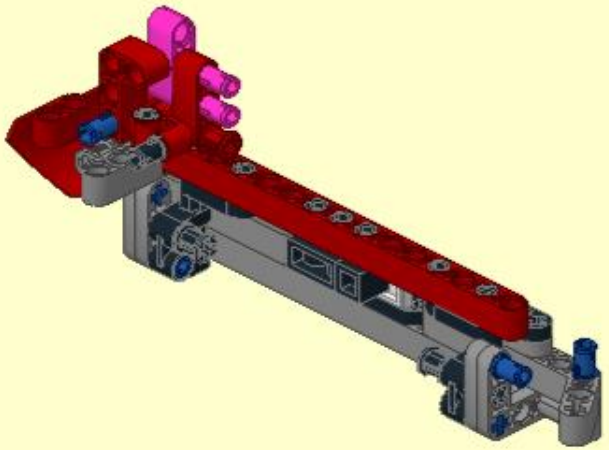

12

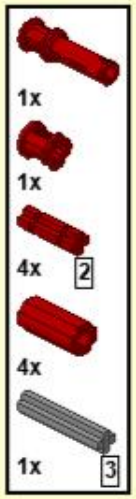

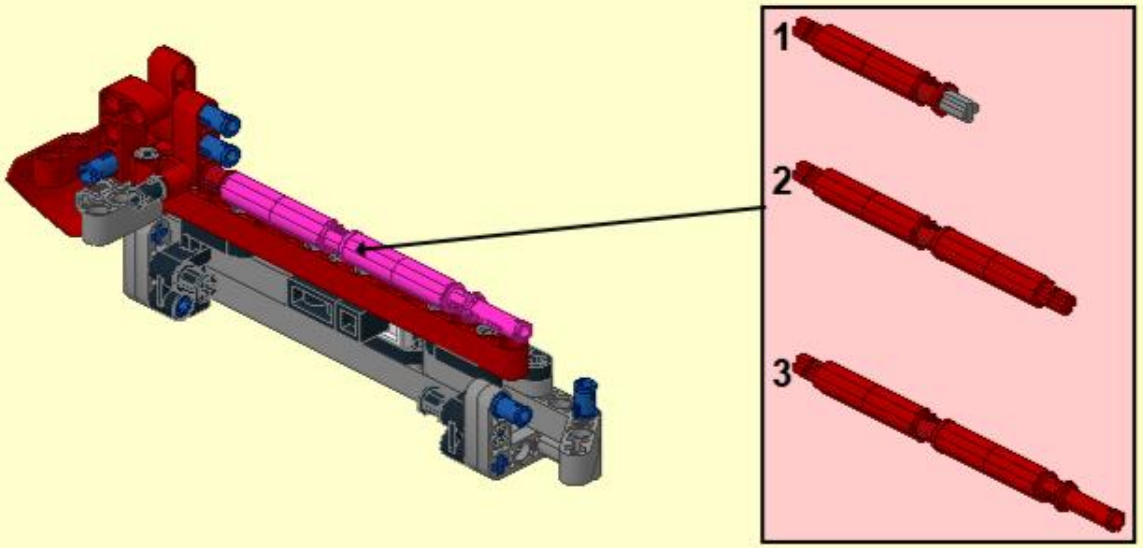

13

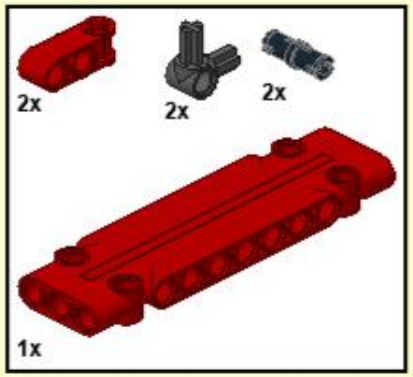

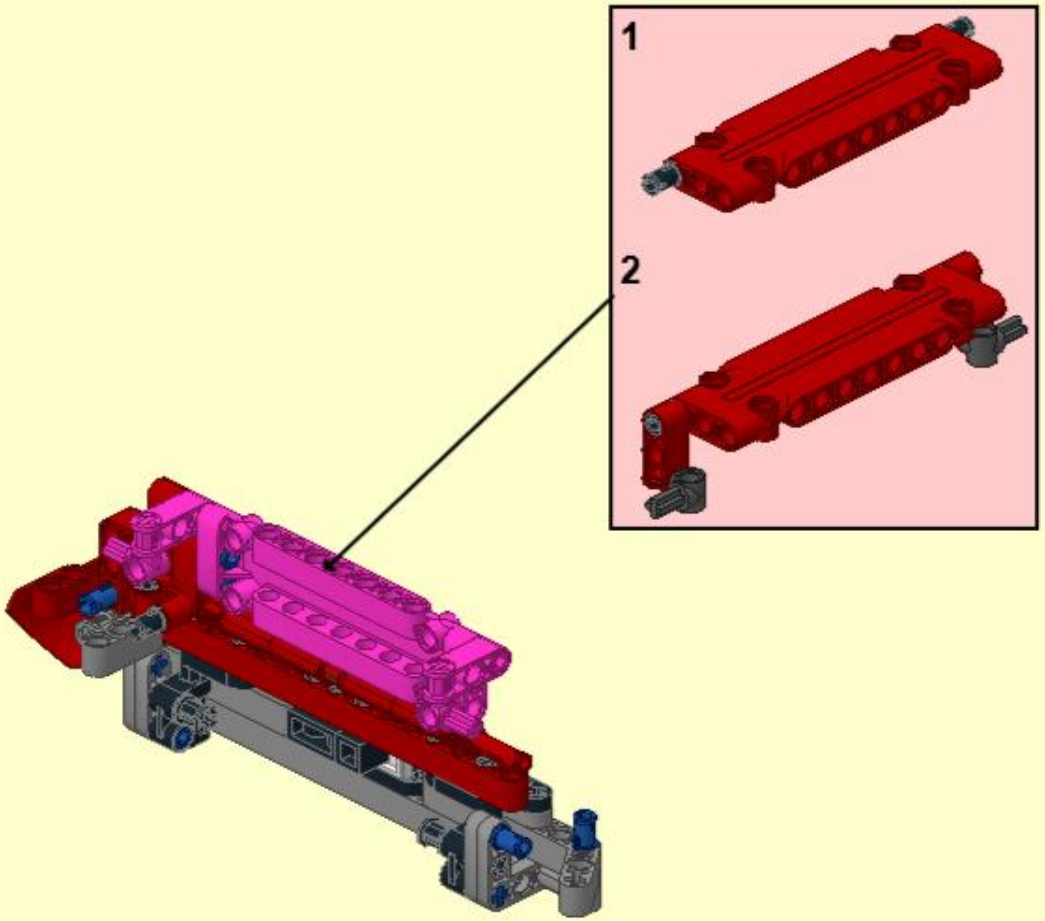

14

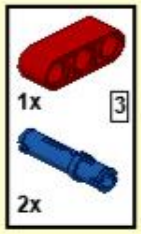

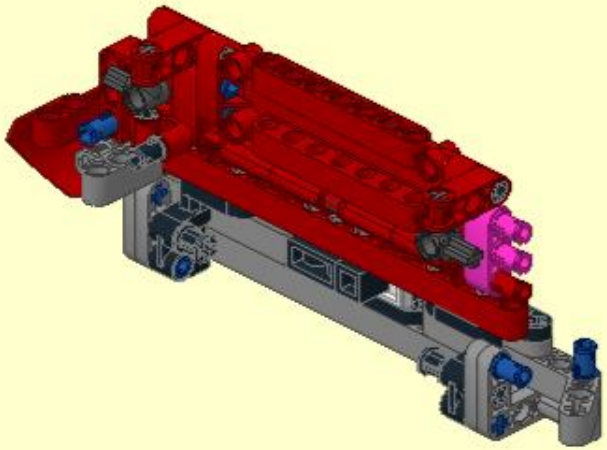

15

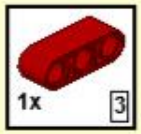

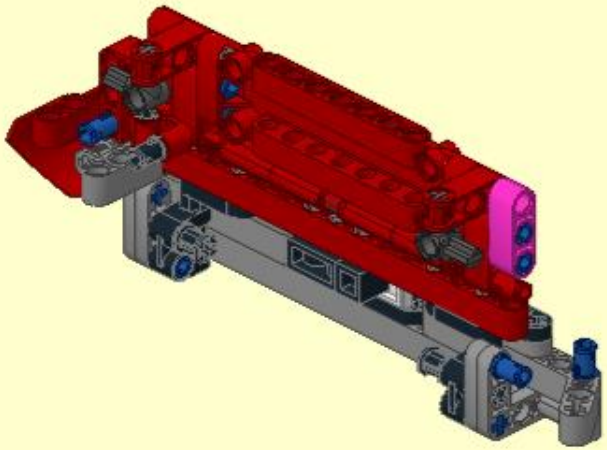

16

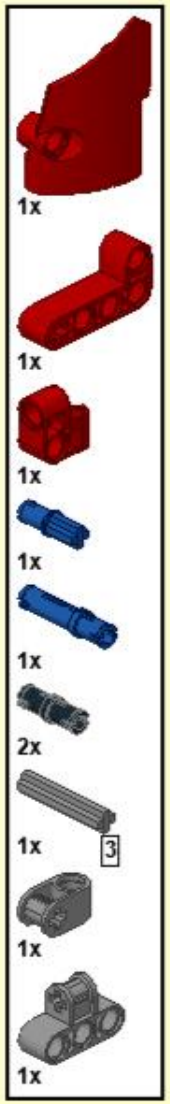

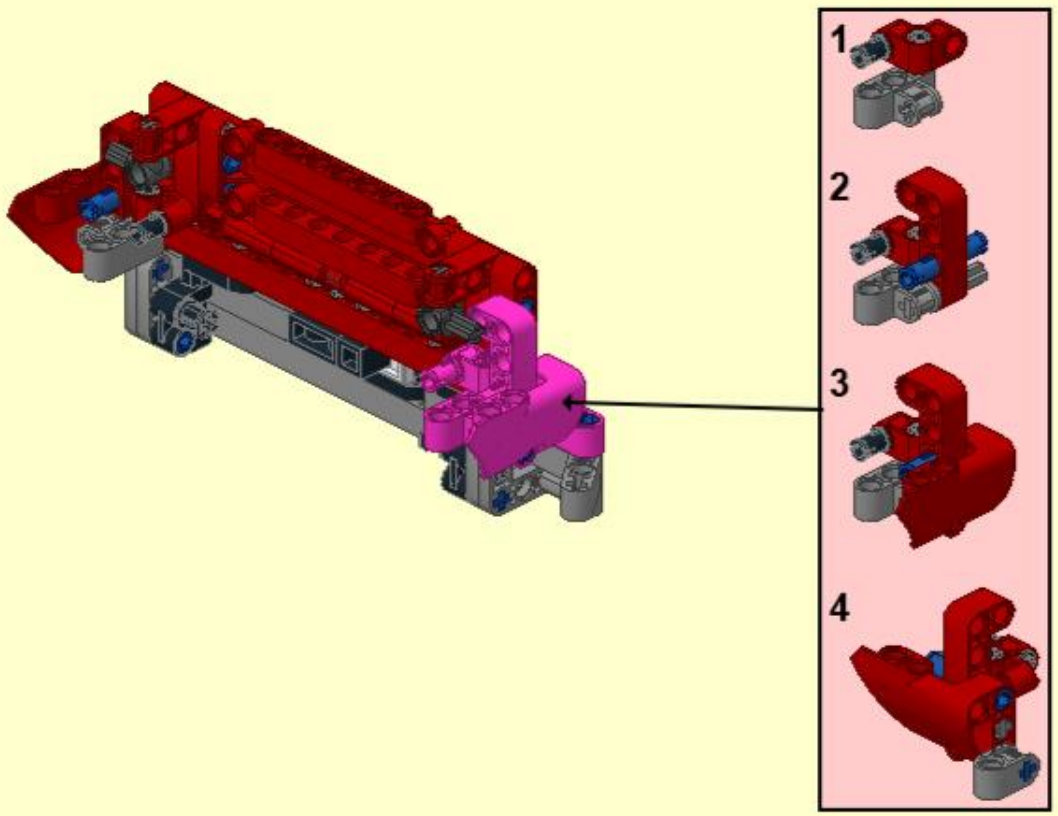

17

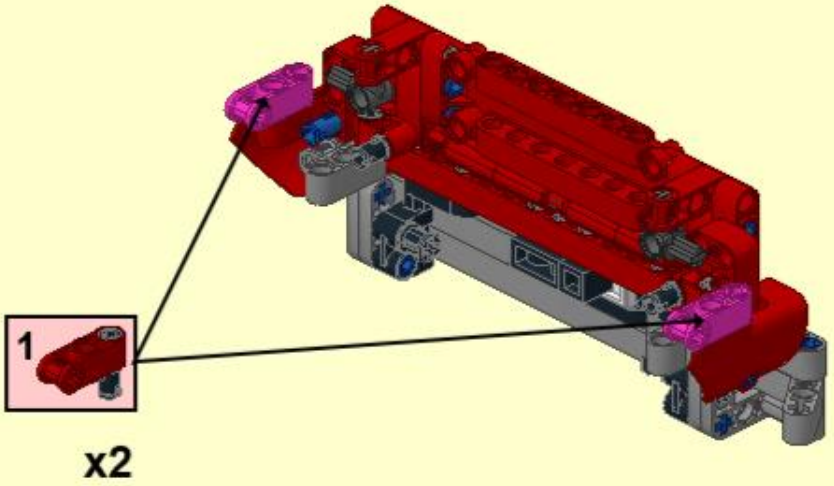

18

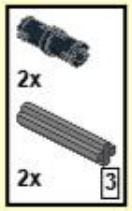

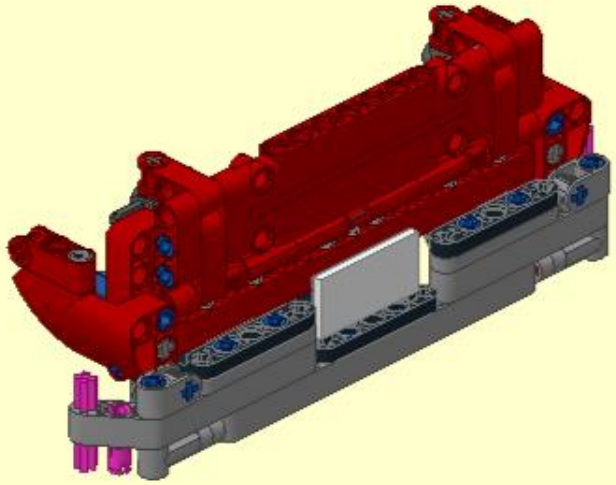

19

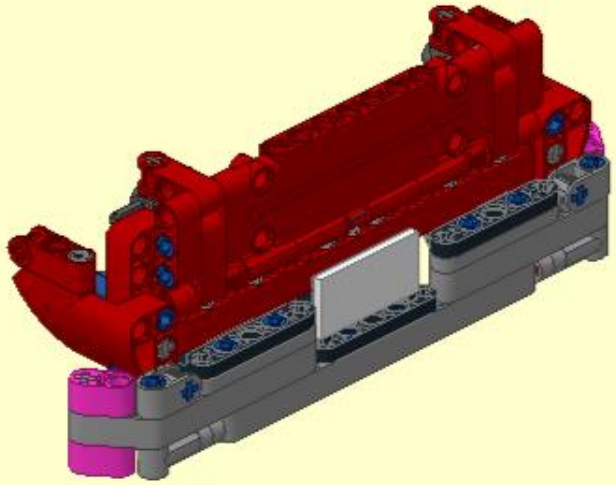

20

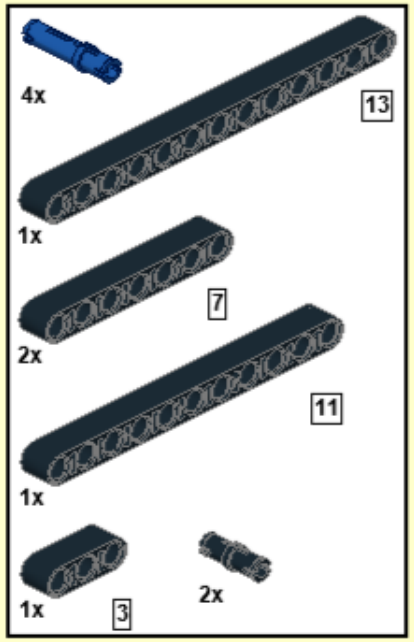

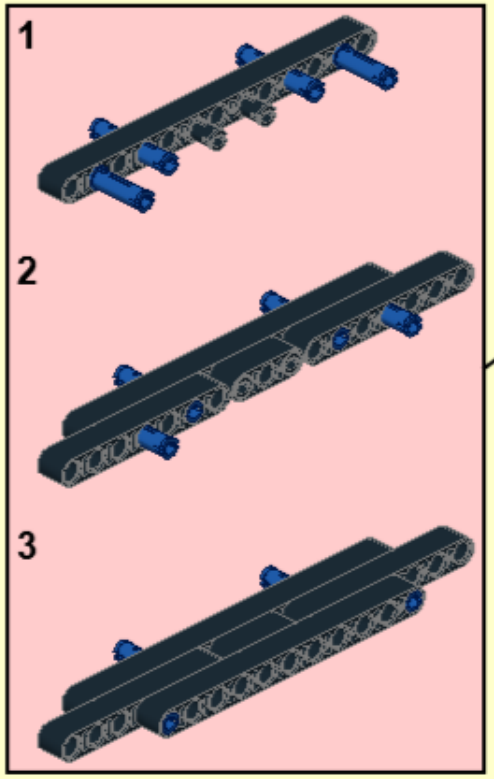

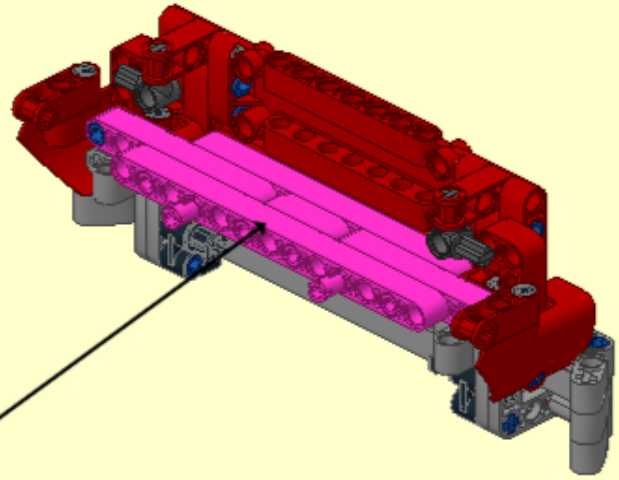

21

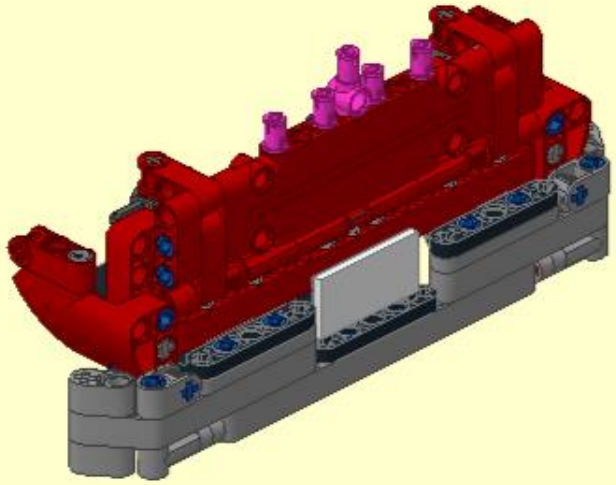

22

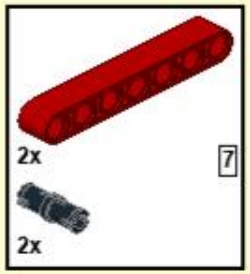

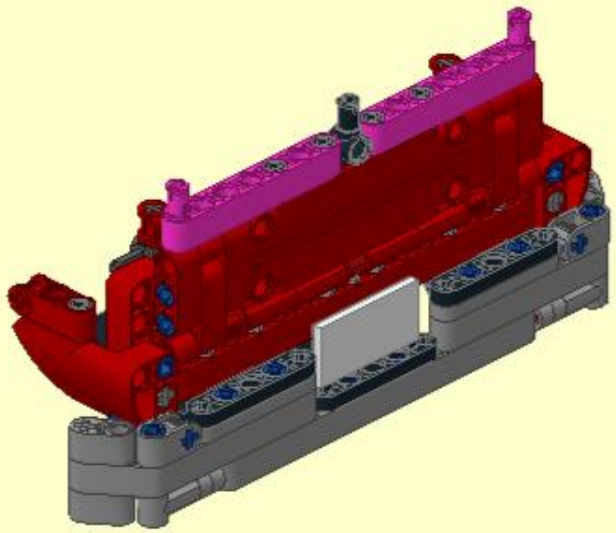

23

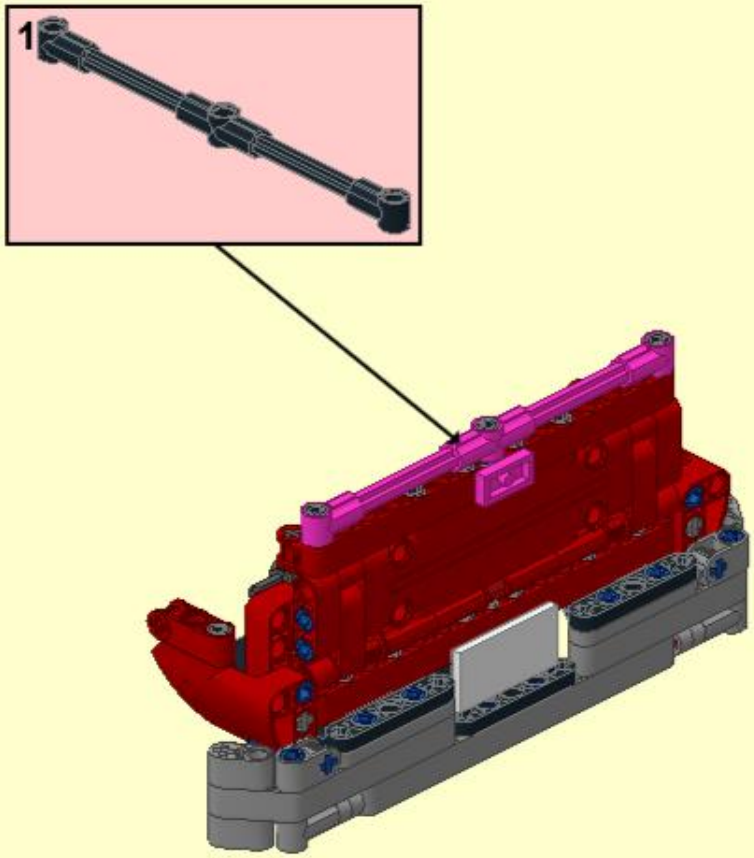

24

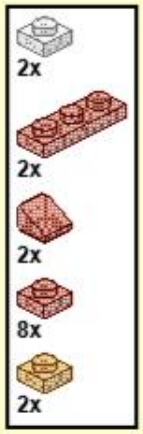

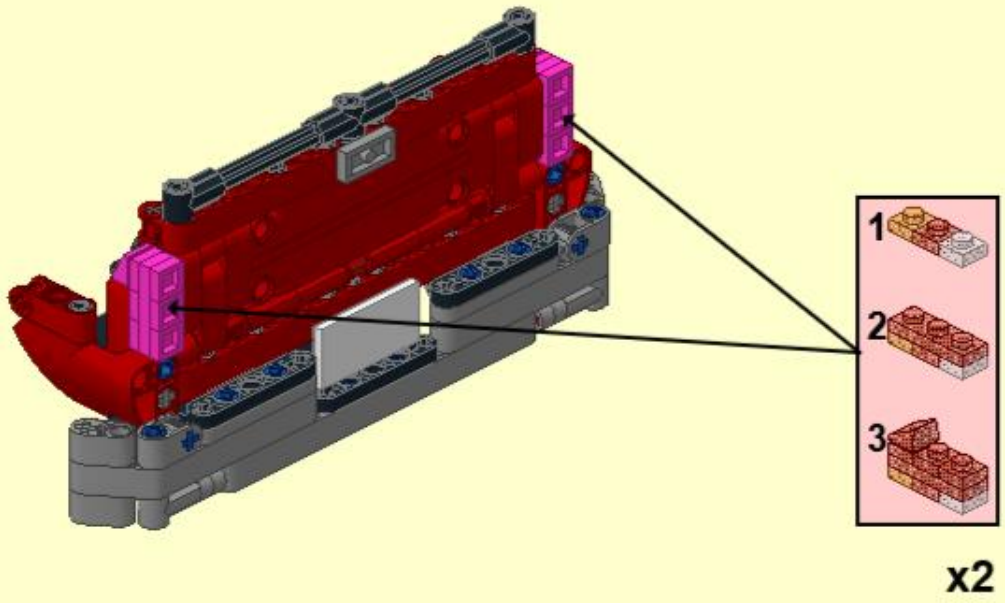

x2

88

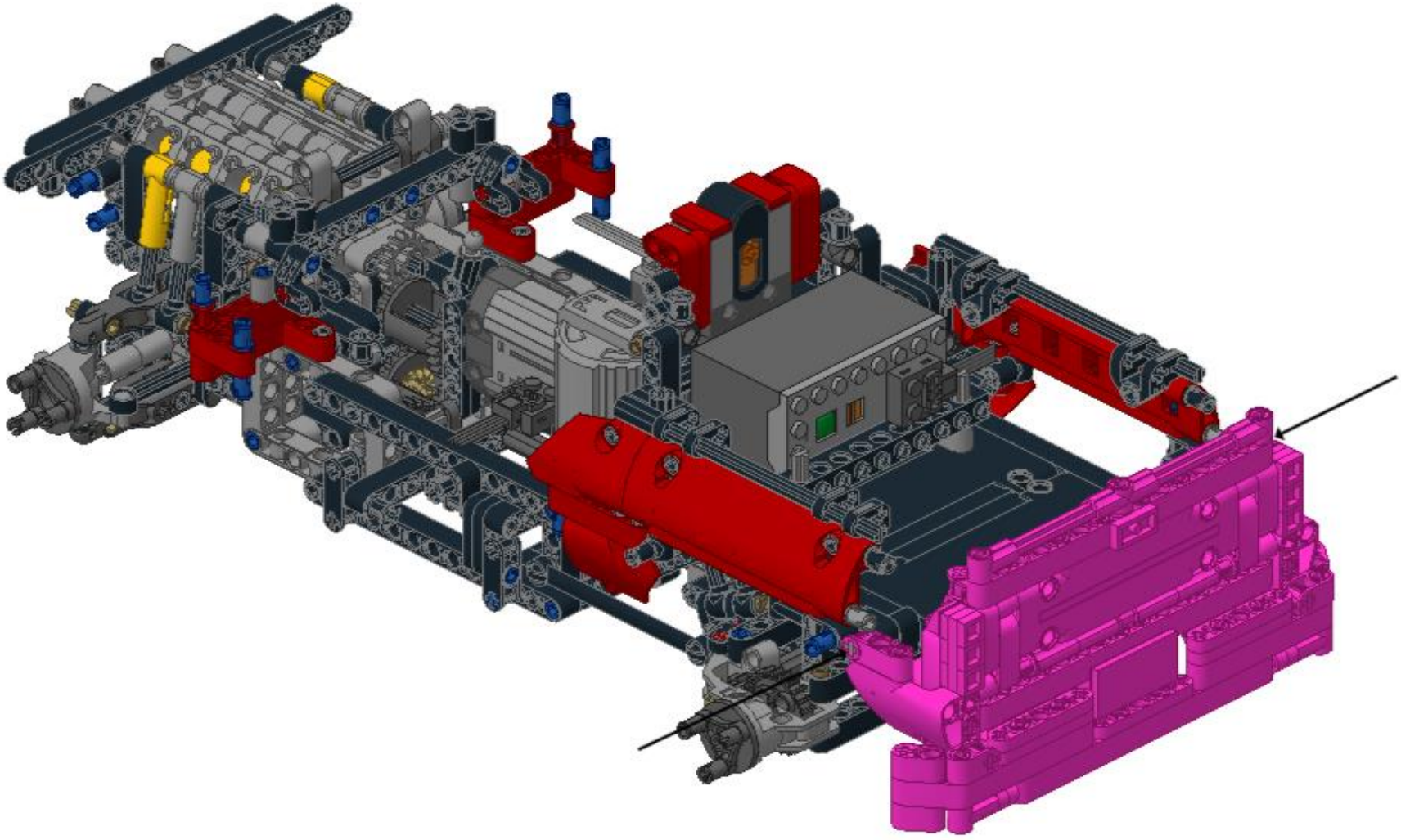

89

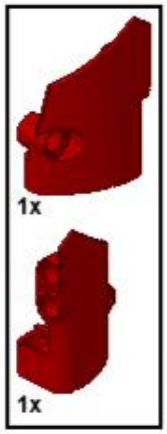

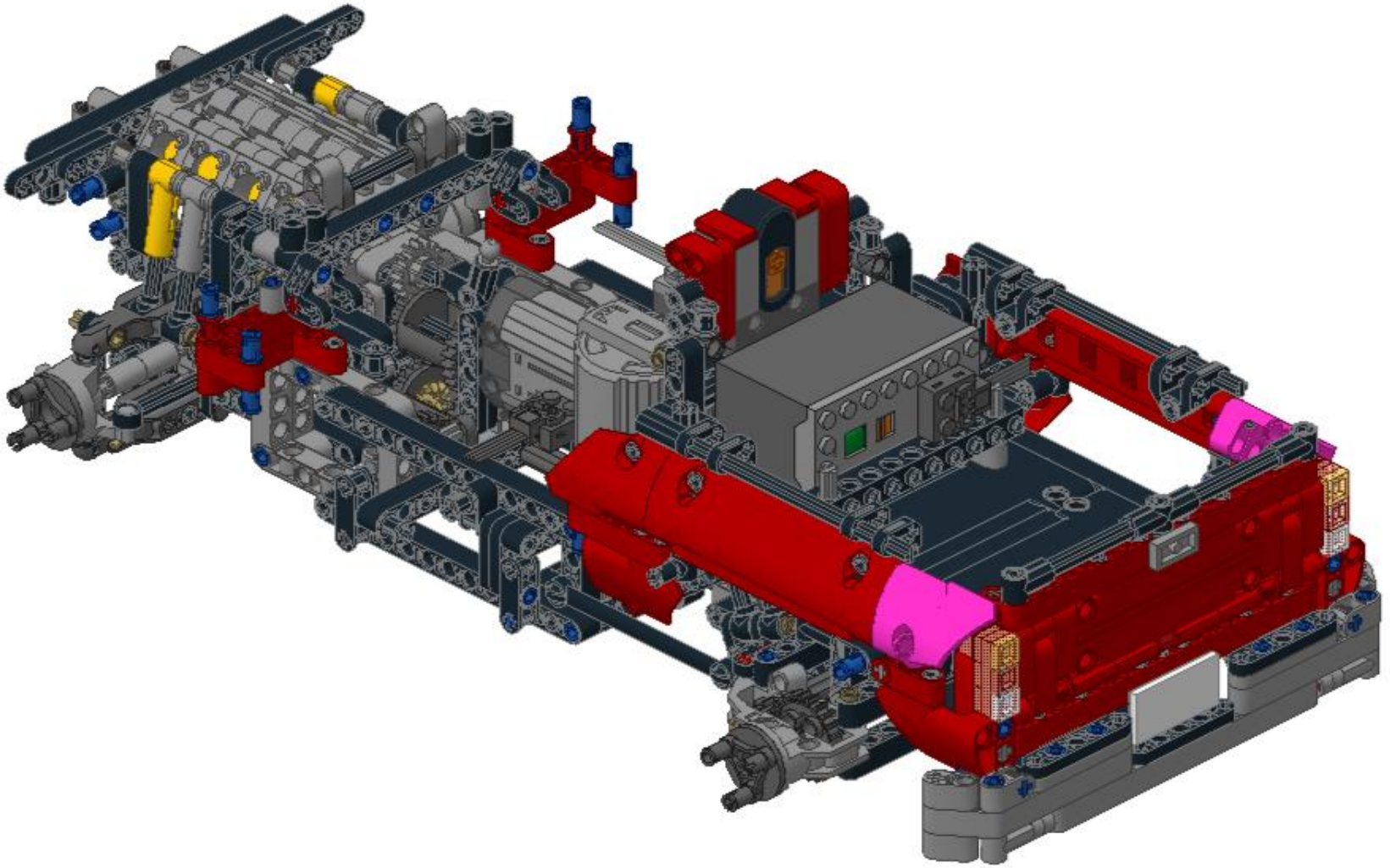

©jokey02

90

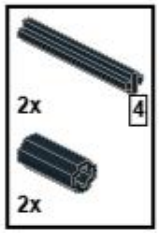

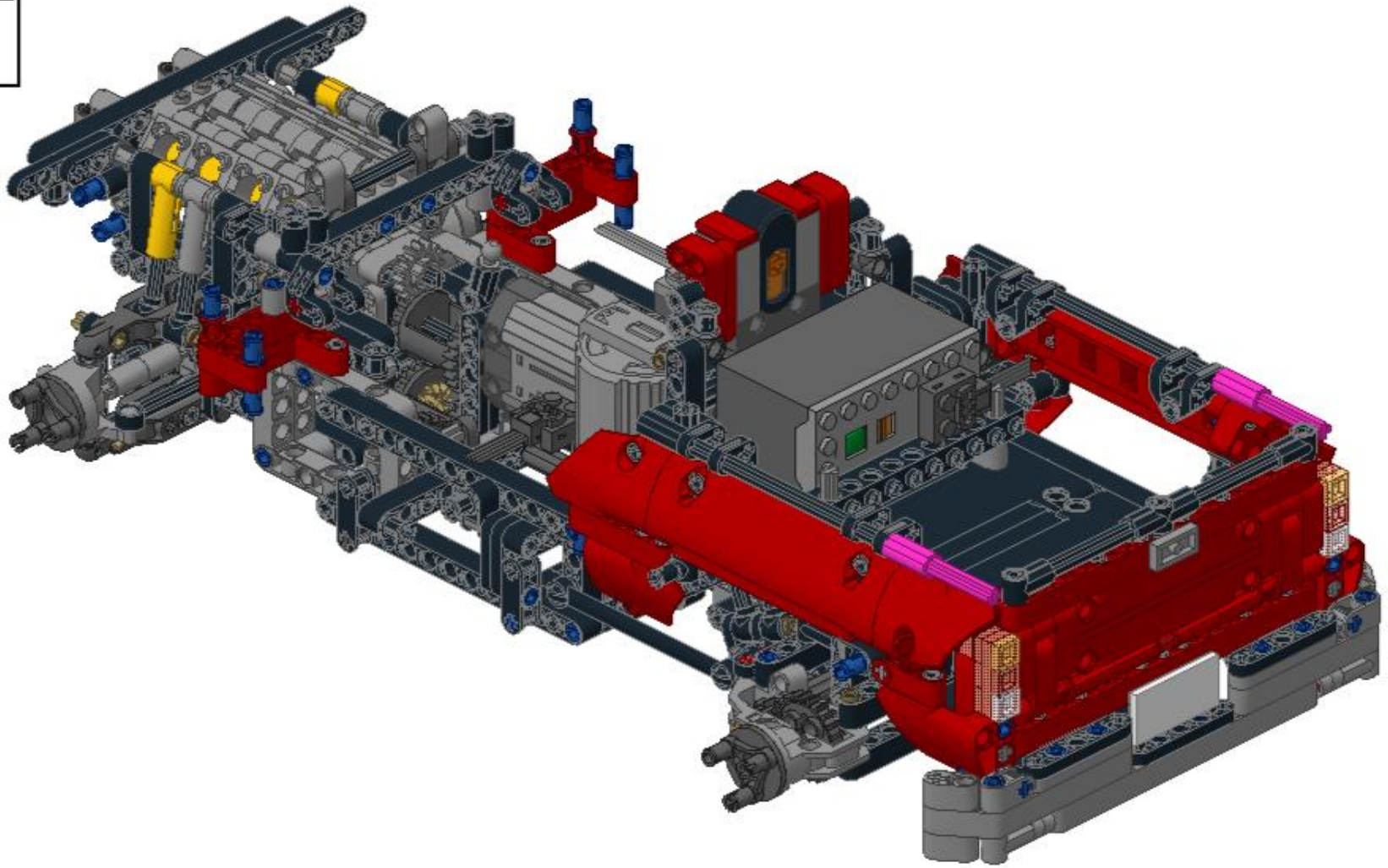

©jokey02

91

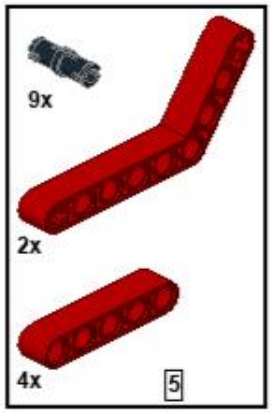

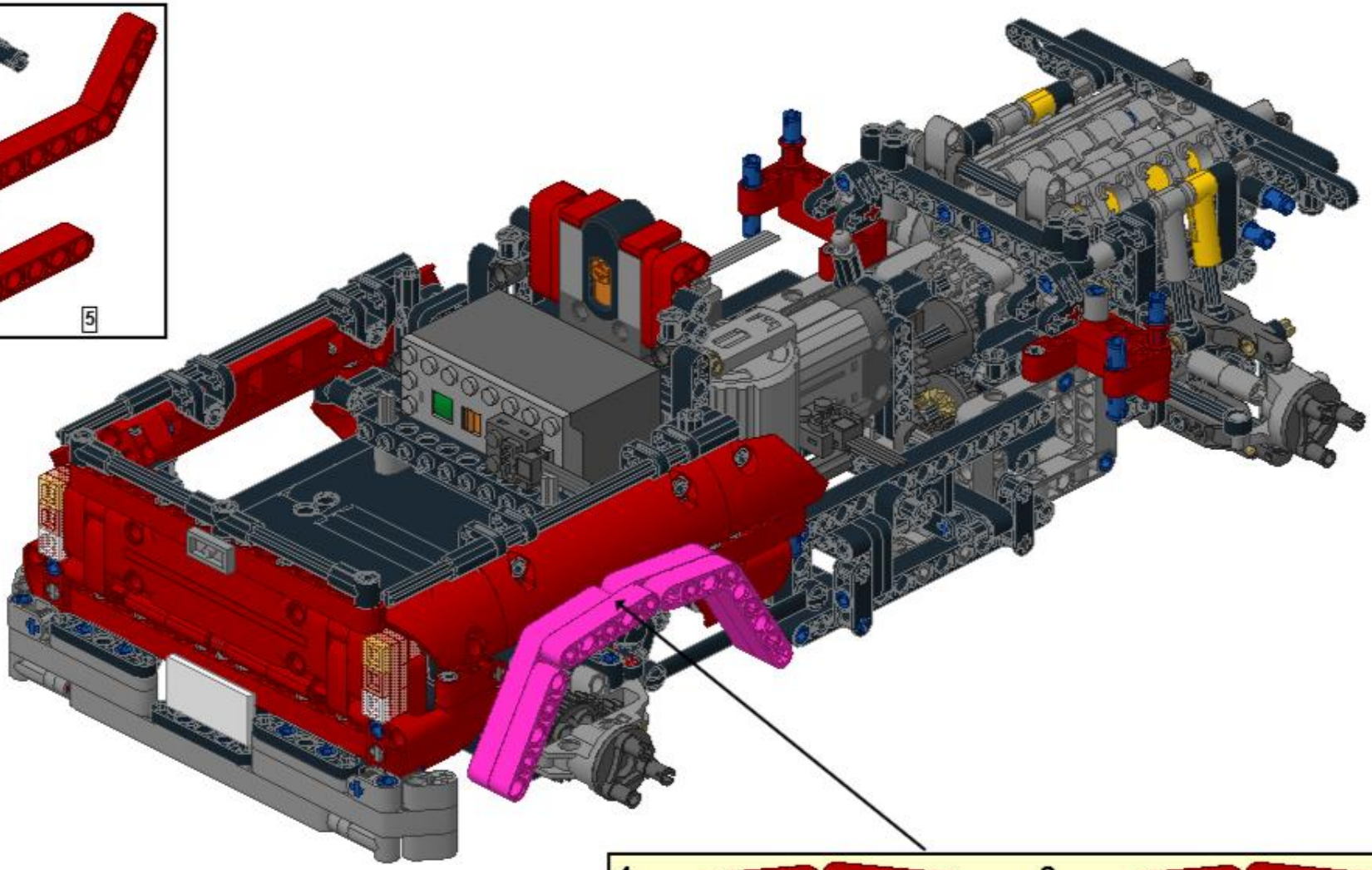

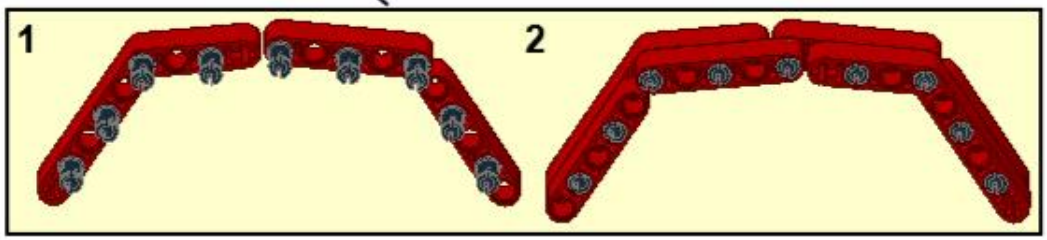

92

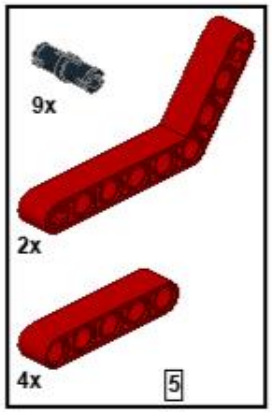

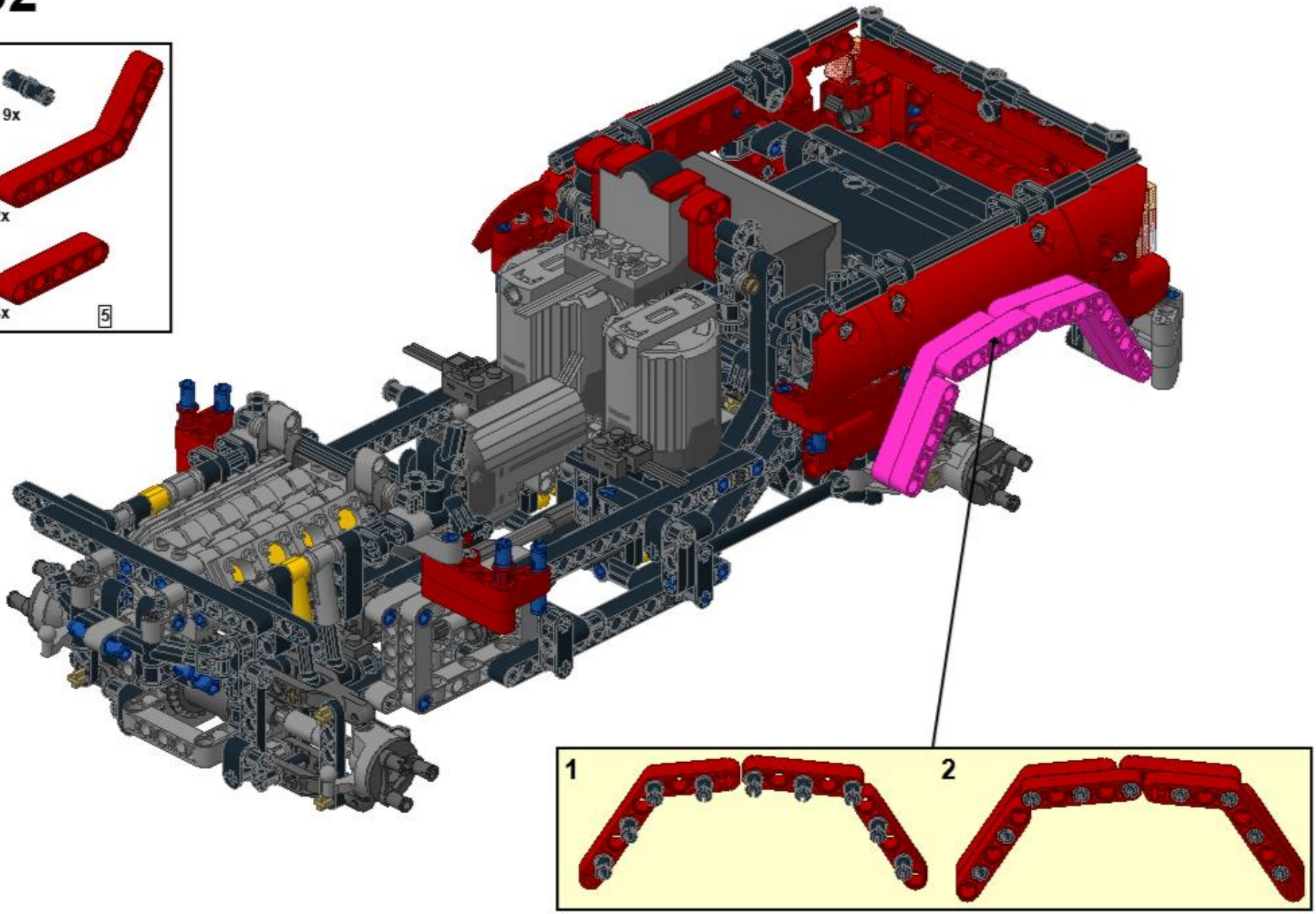

93

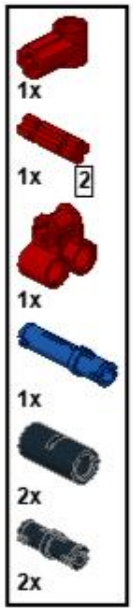

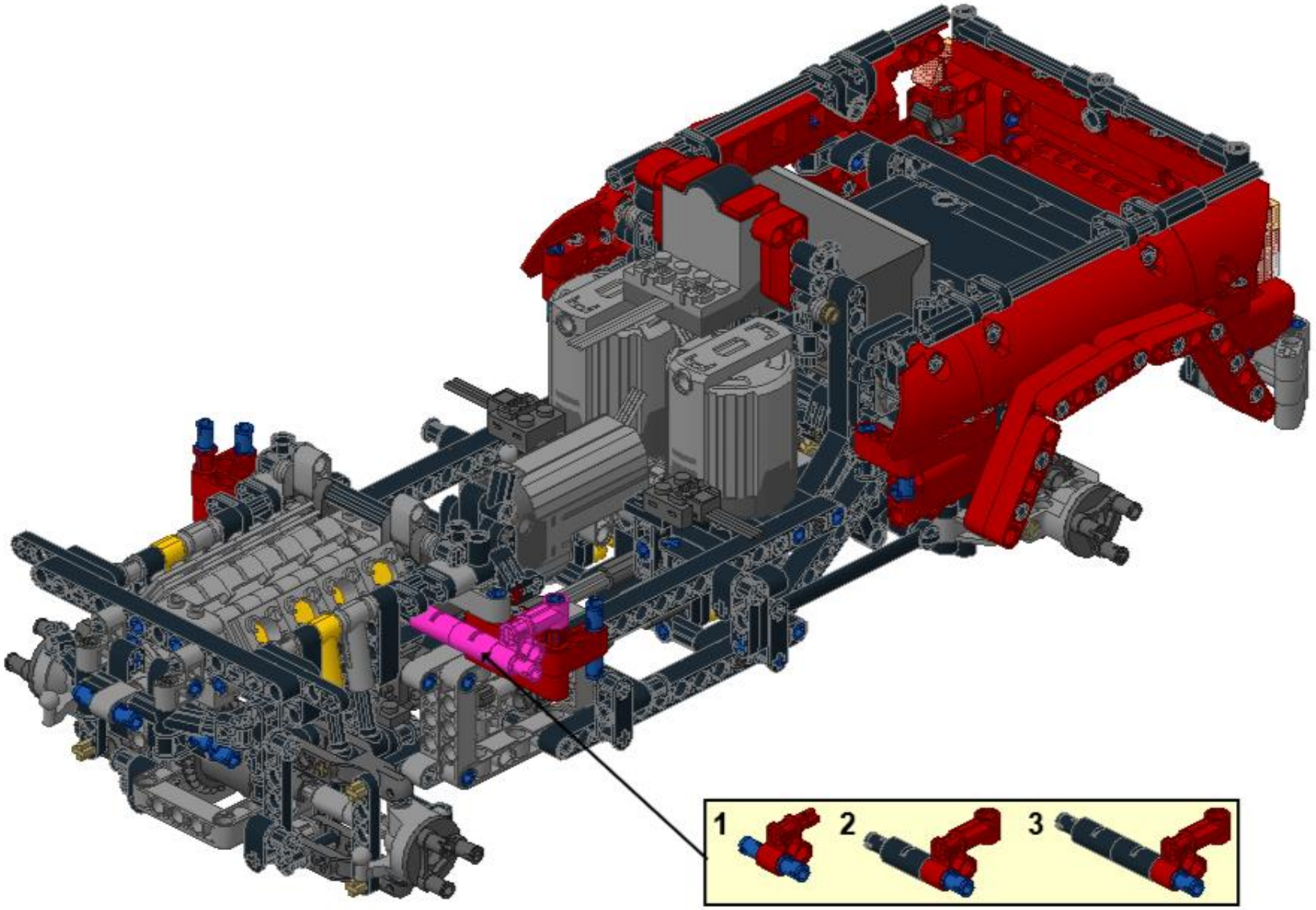

94

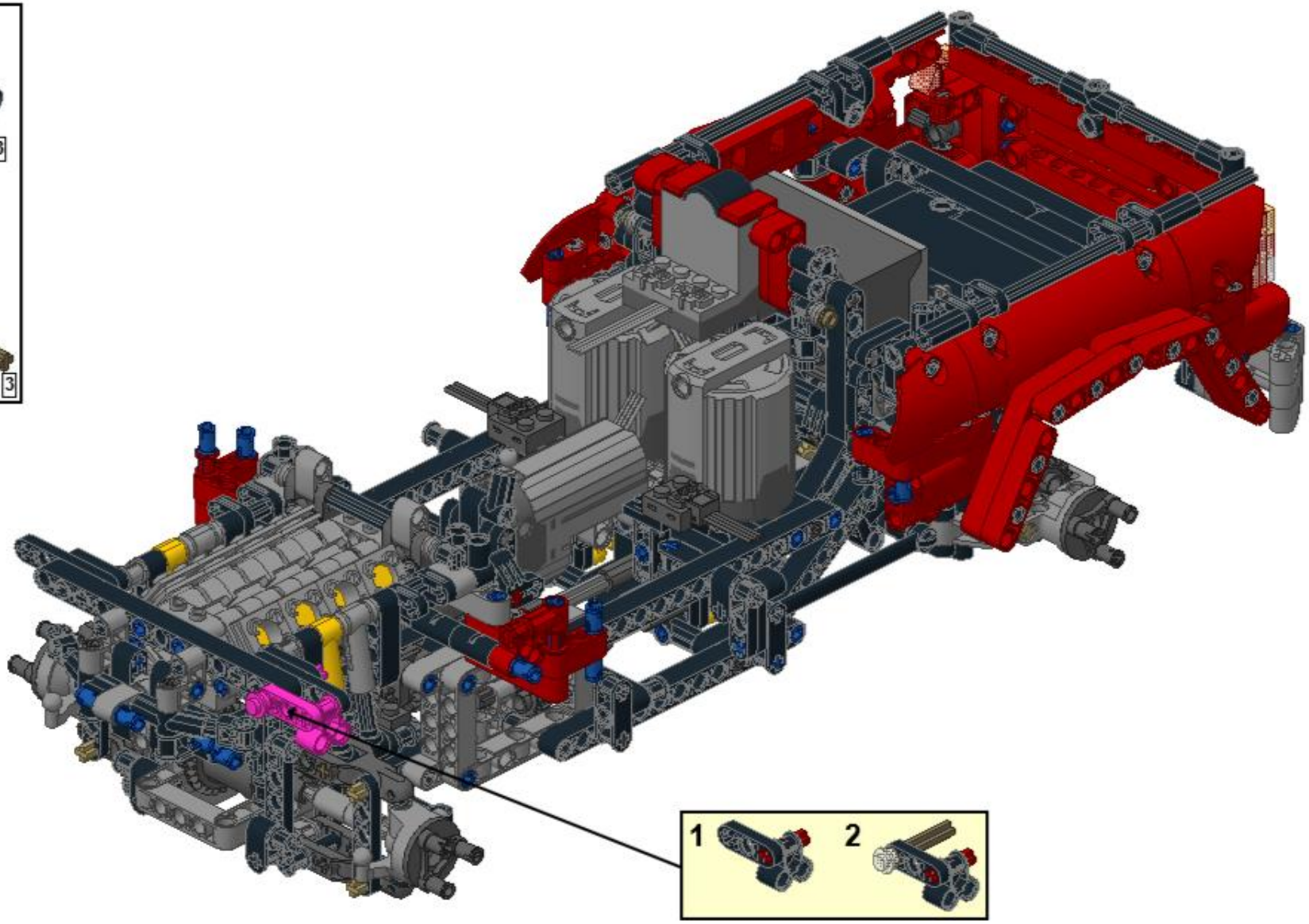

95

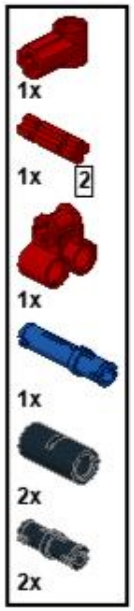

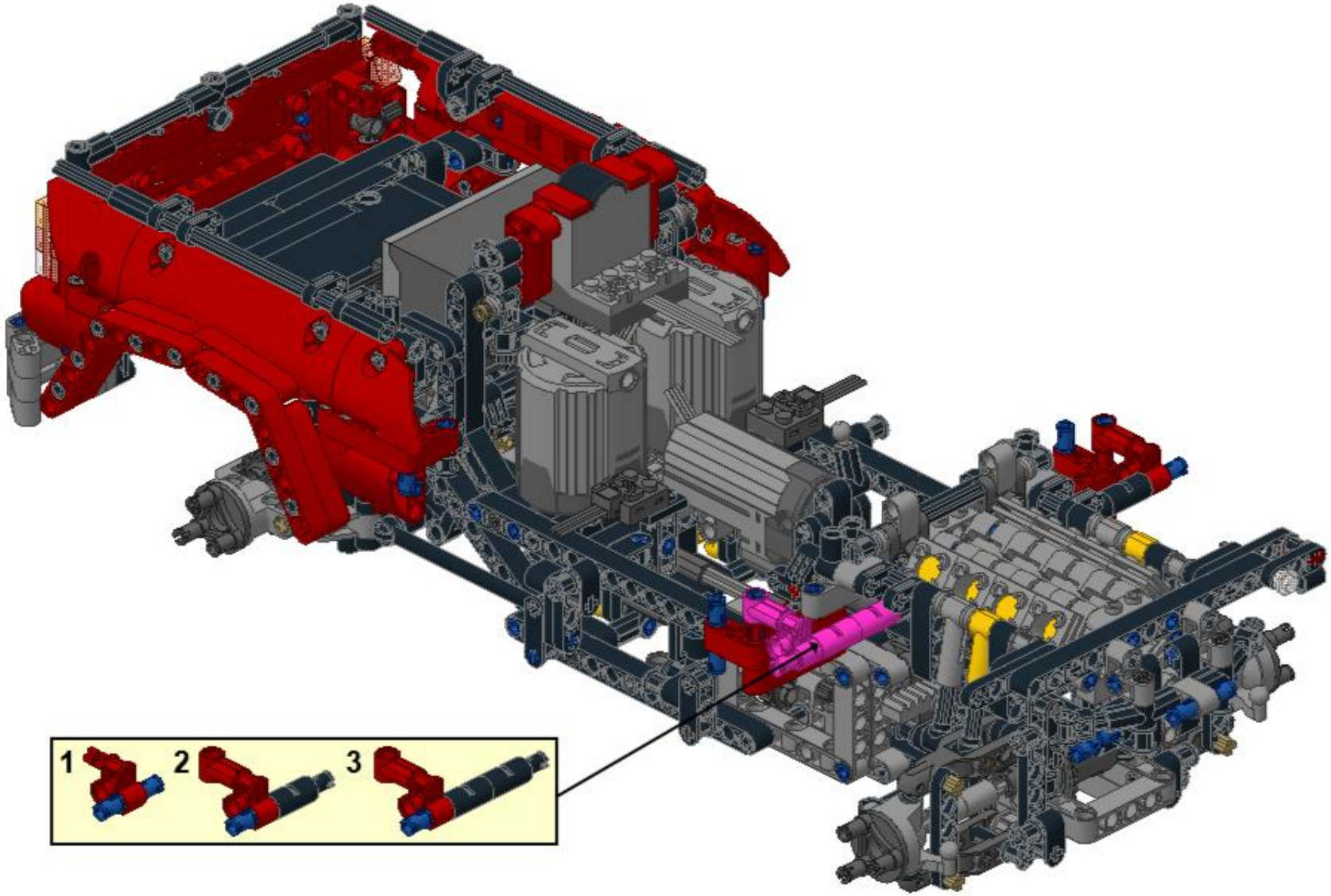

96

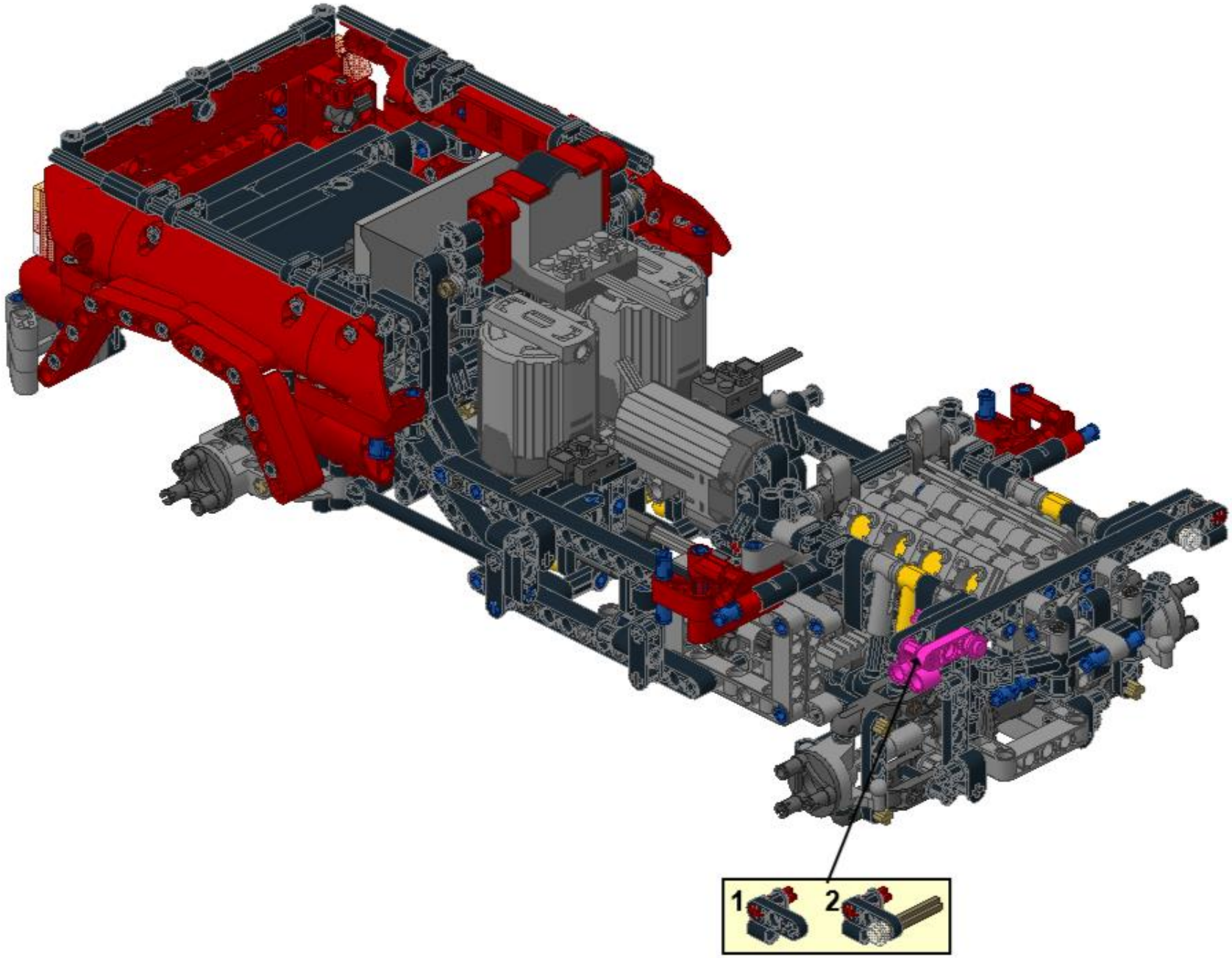

97

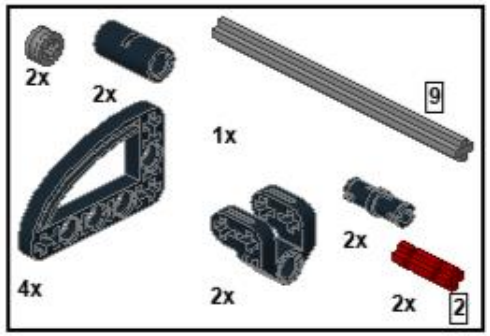

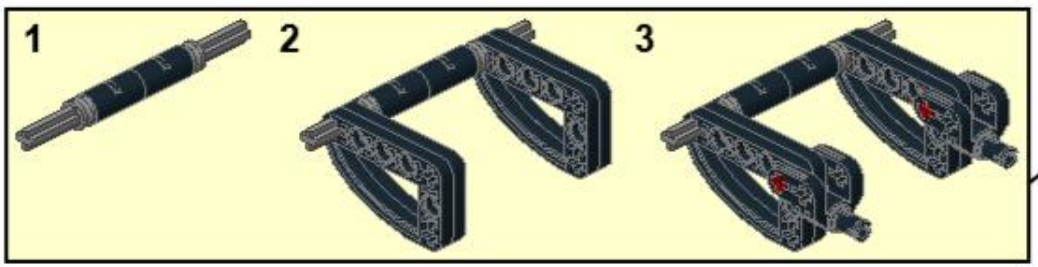

98

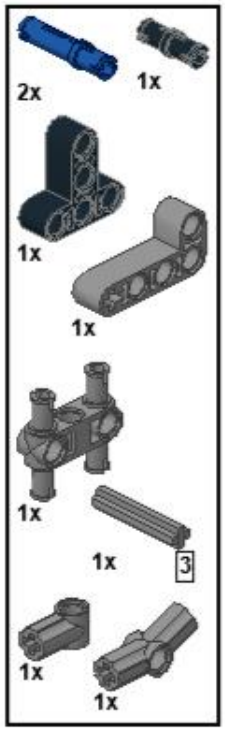

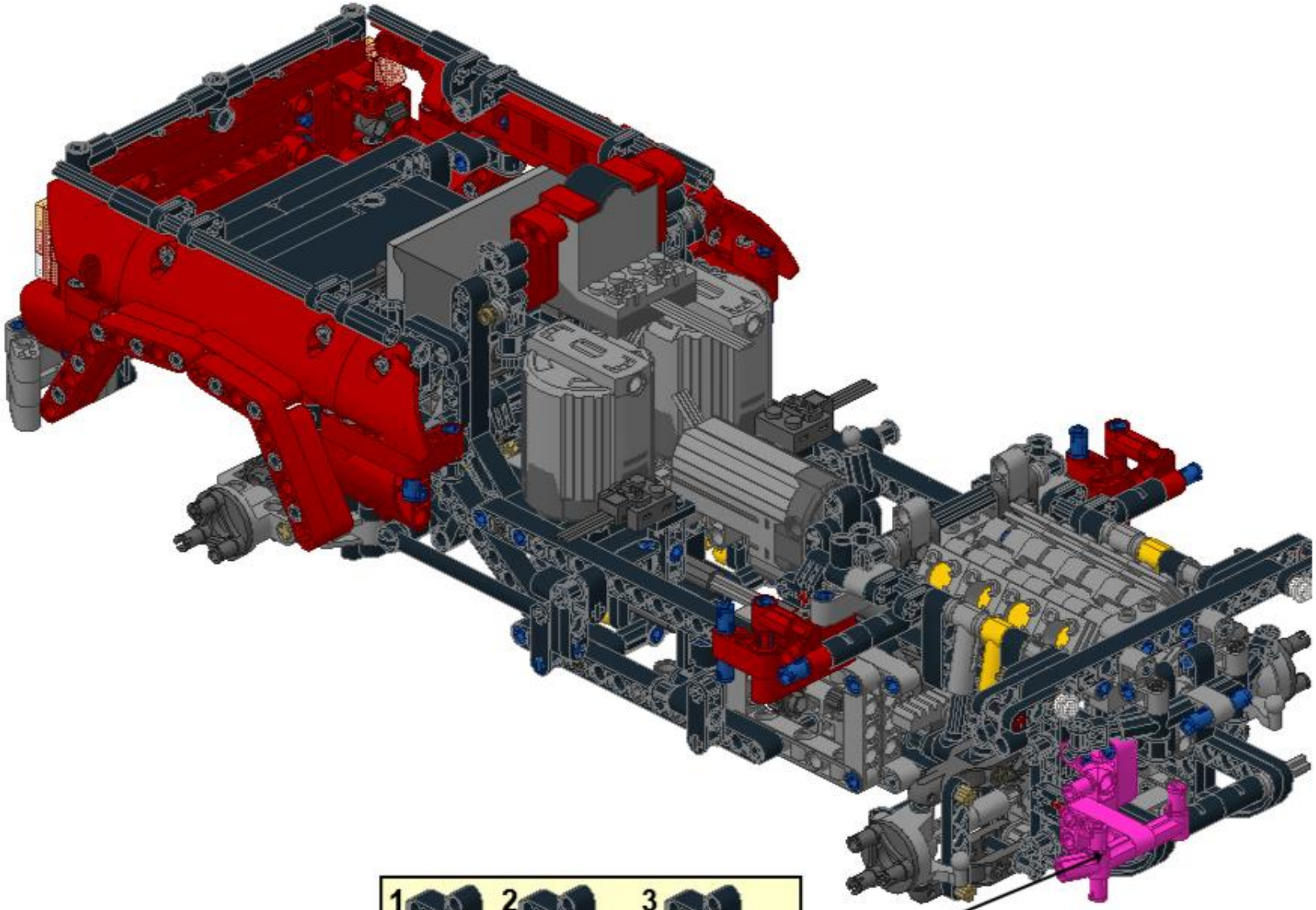

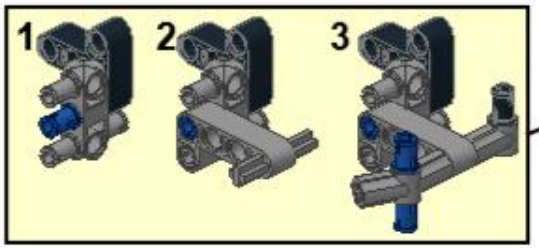

99

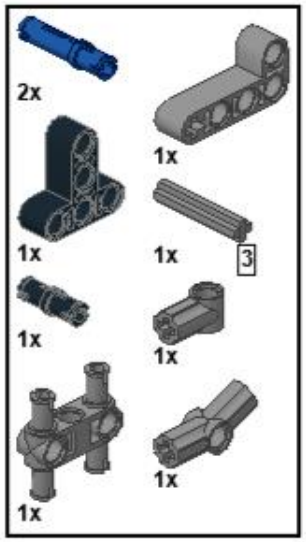

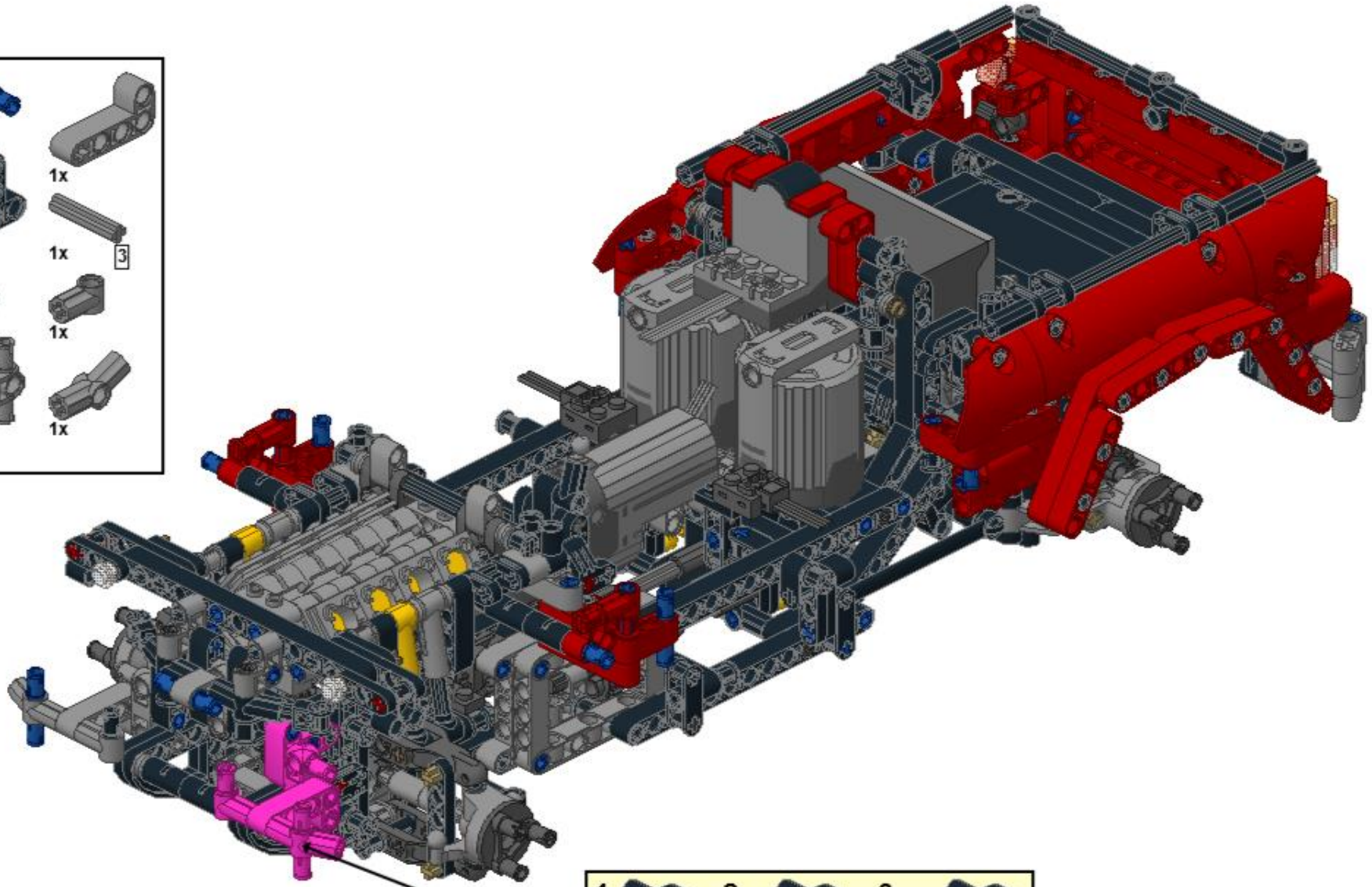

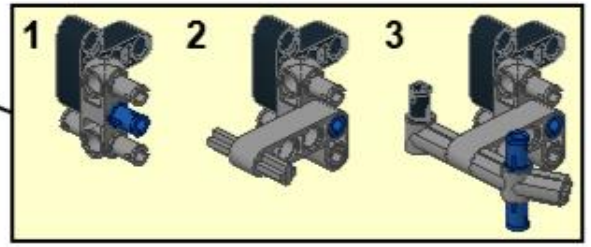

©jokey02

100

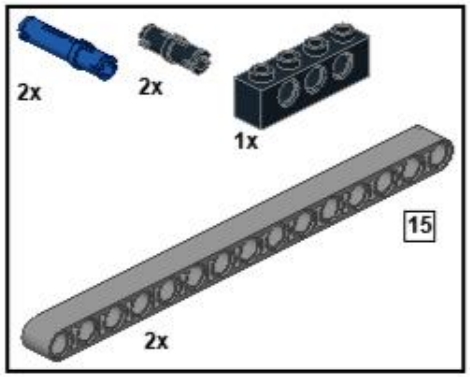

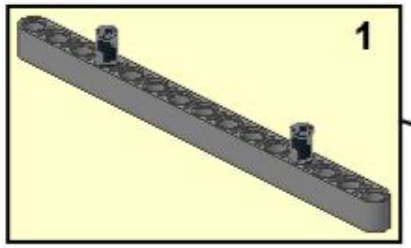

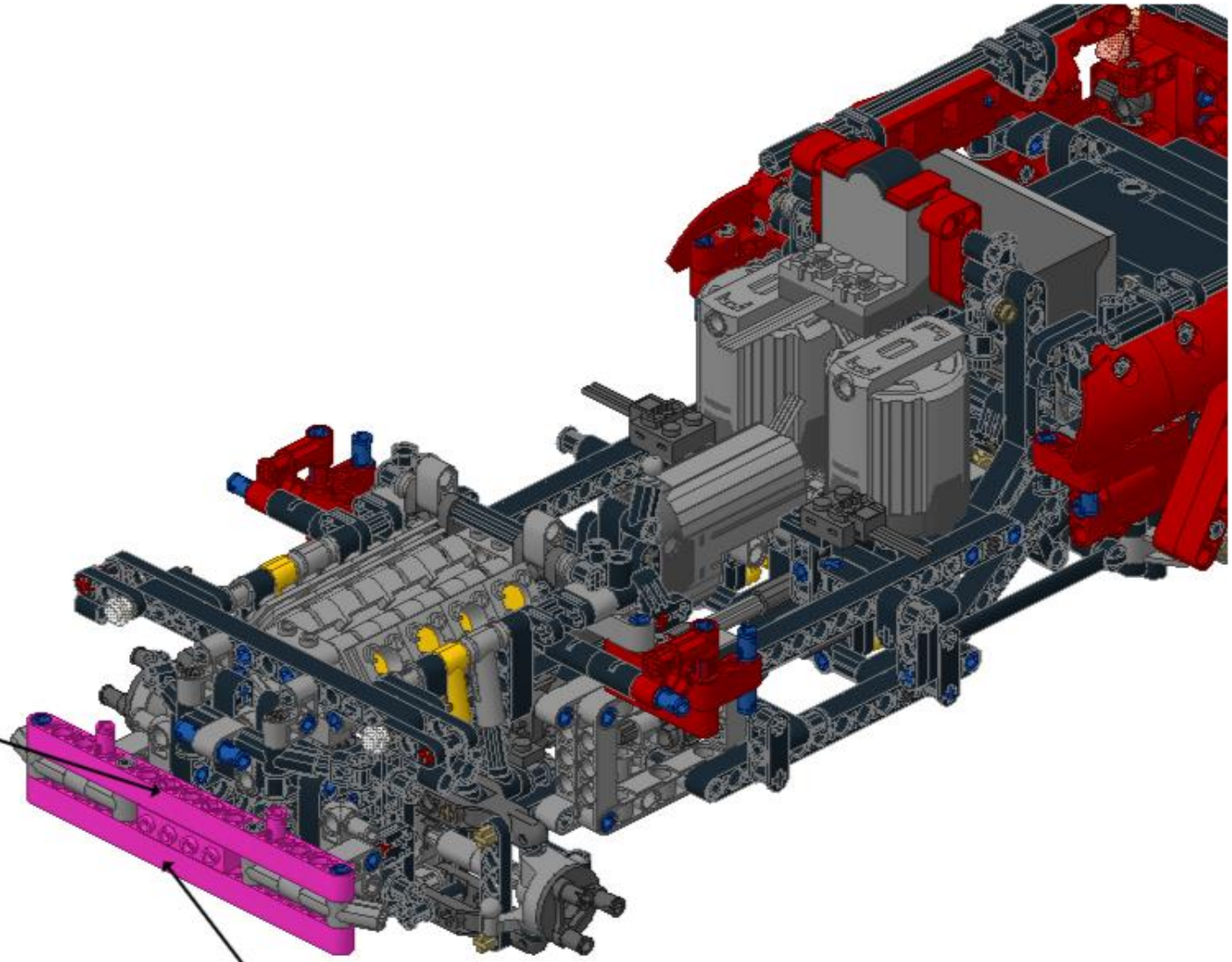

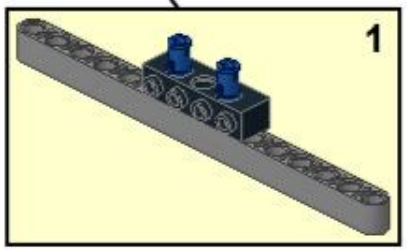

101

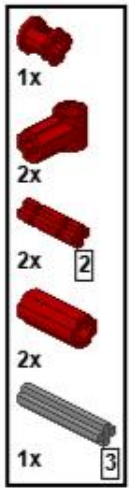

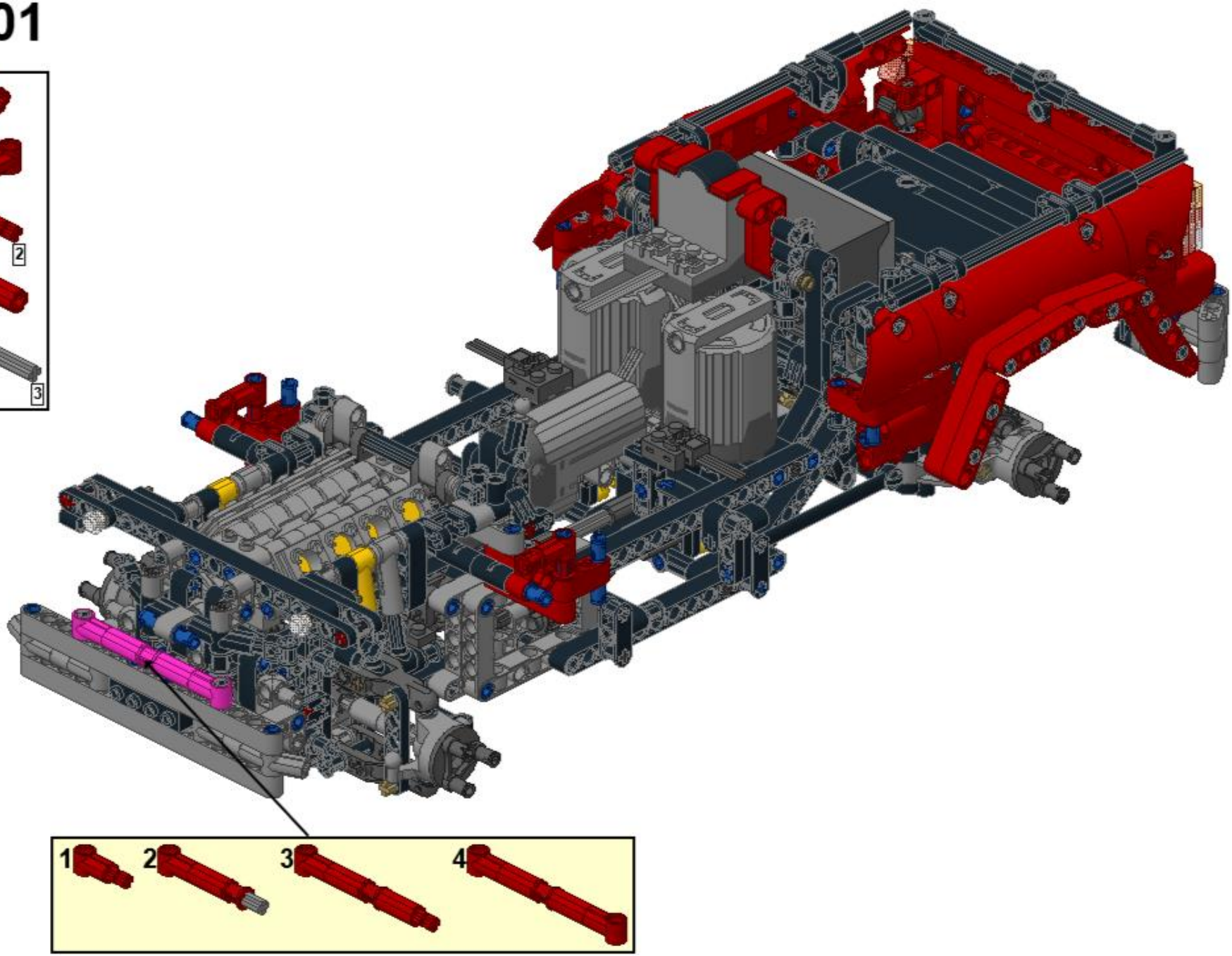

102

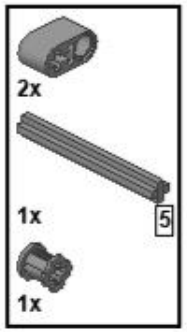

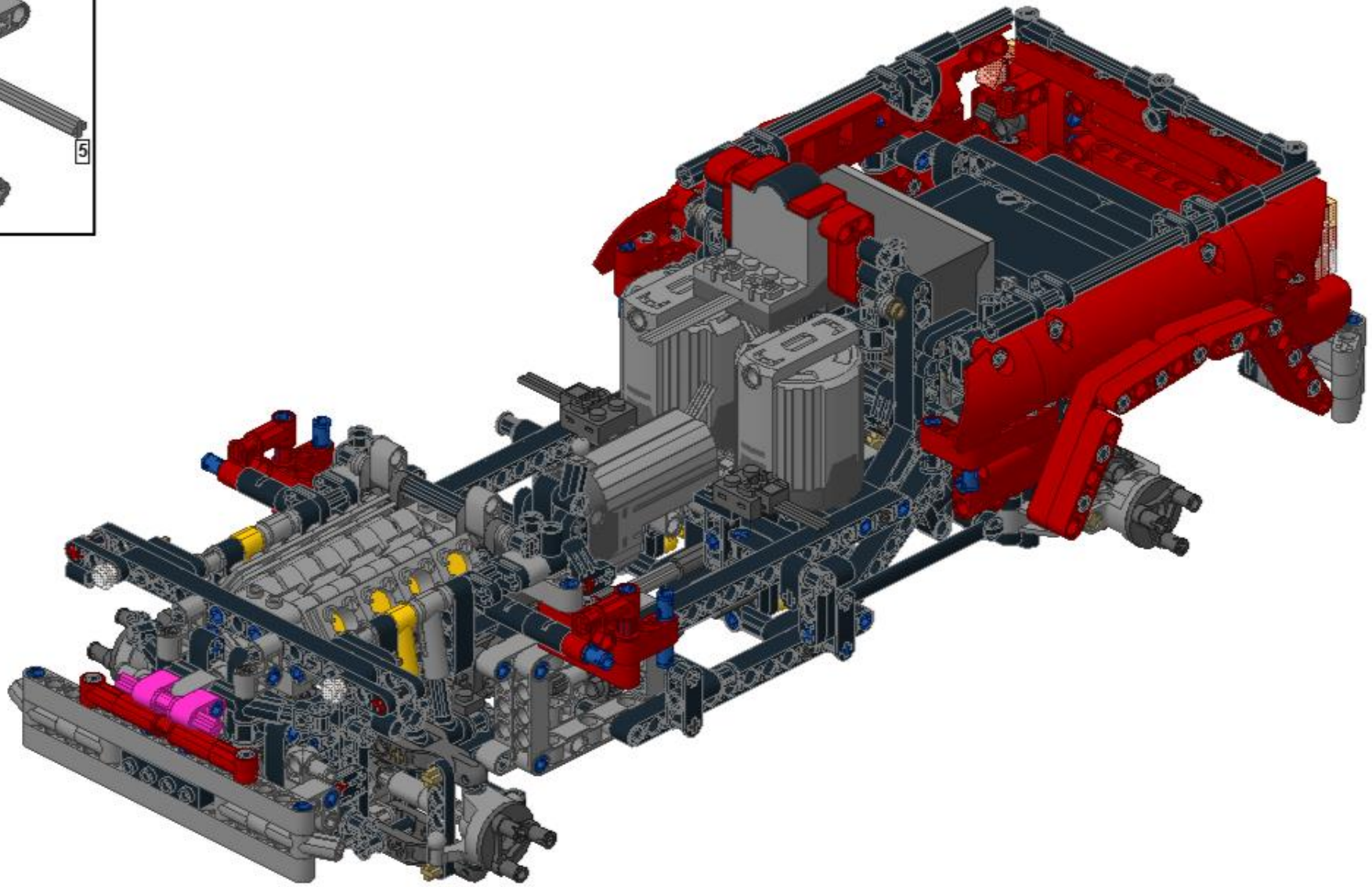

103

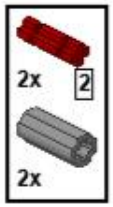

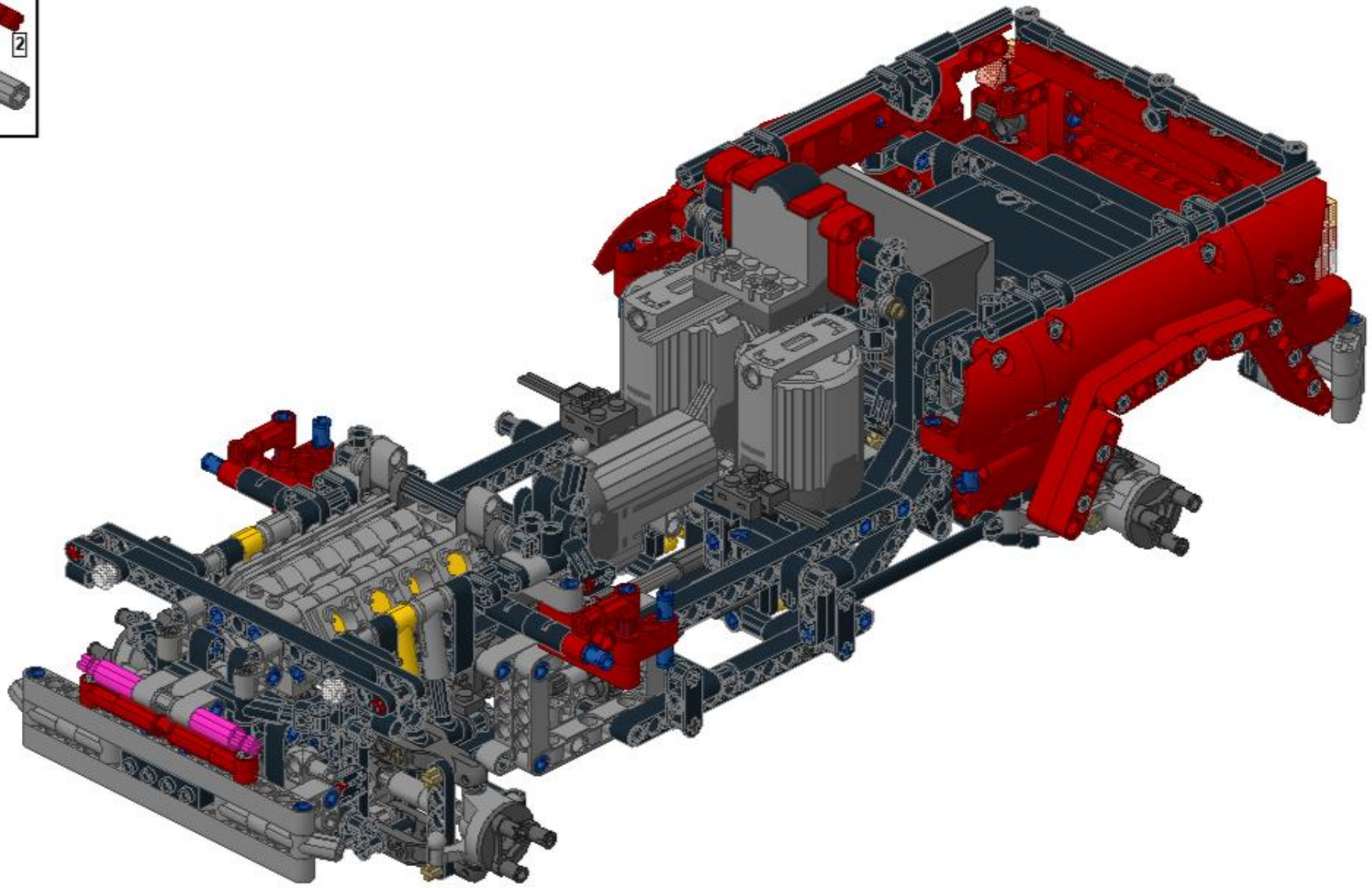

©jokey02

104

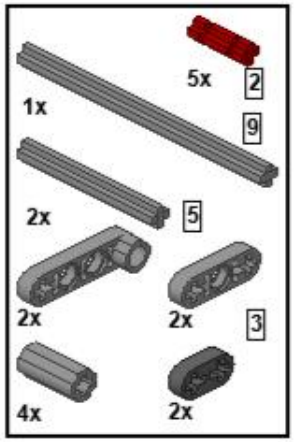

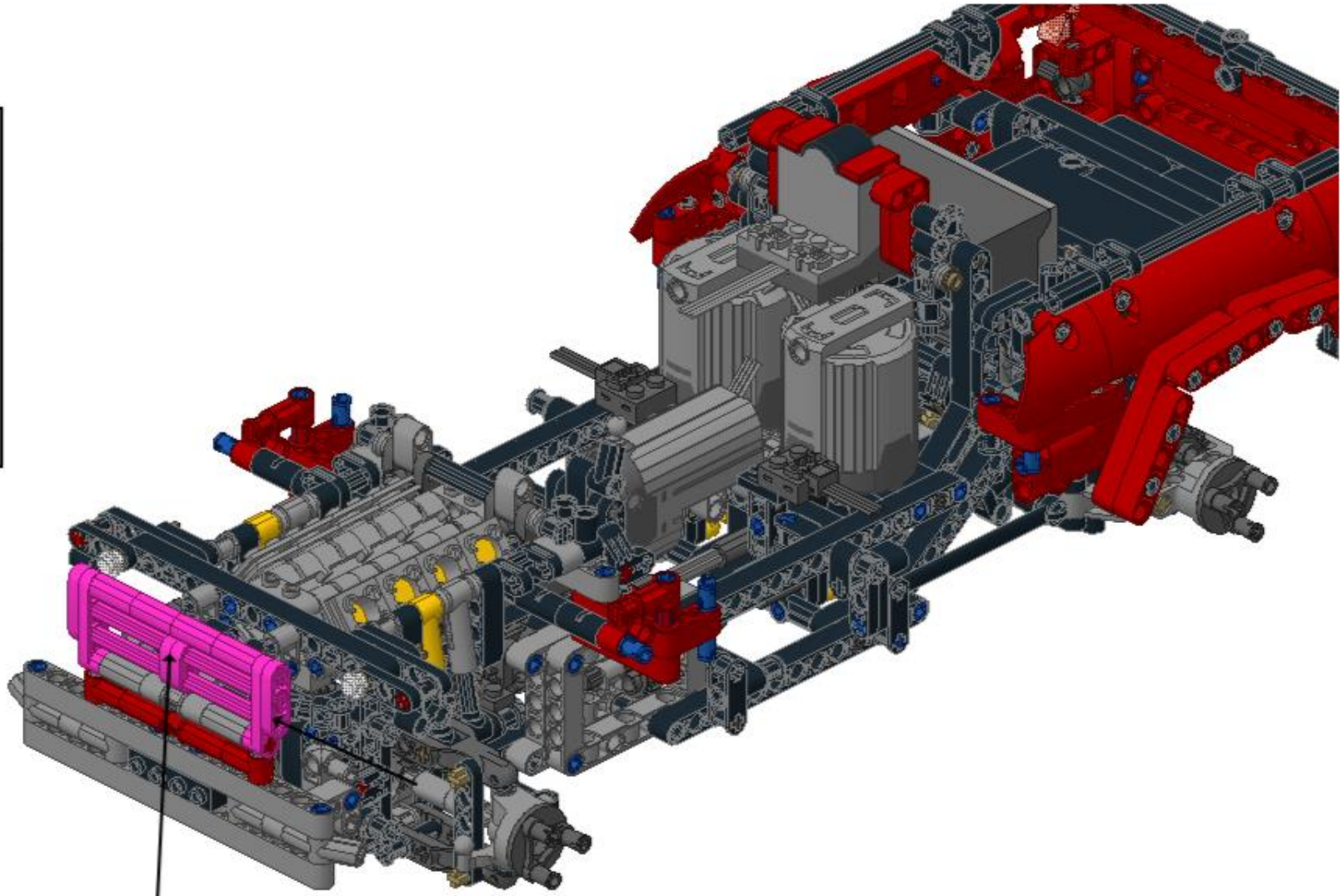

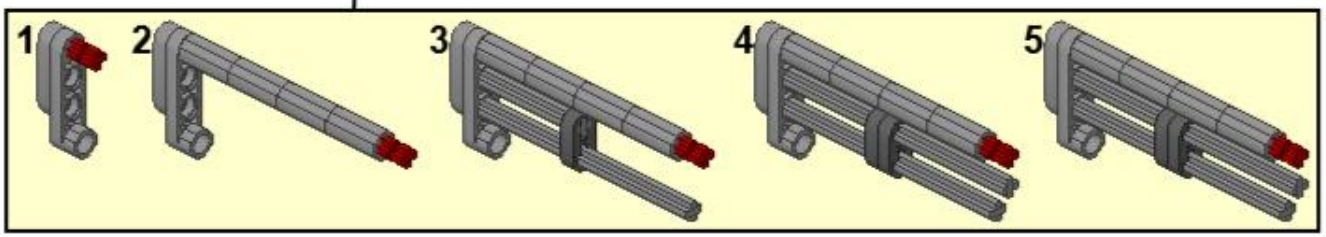

©jokey02

105

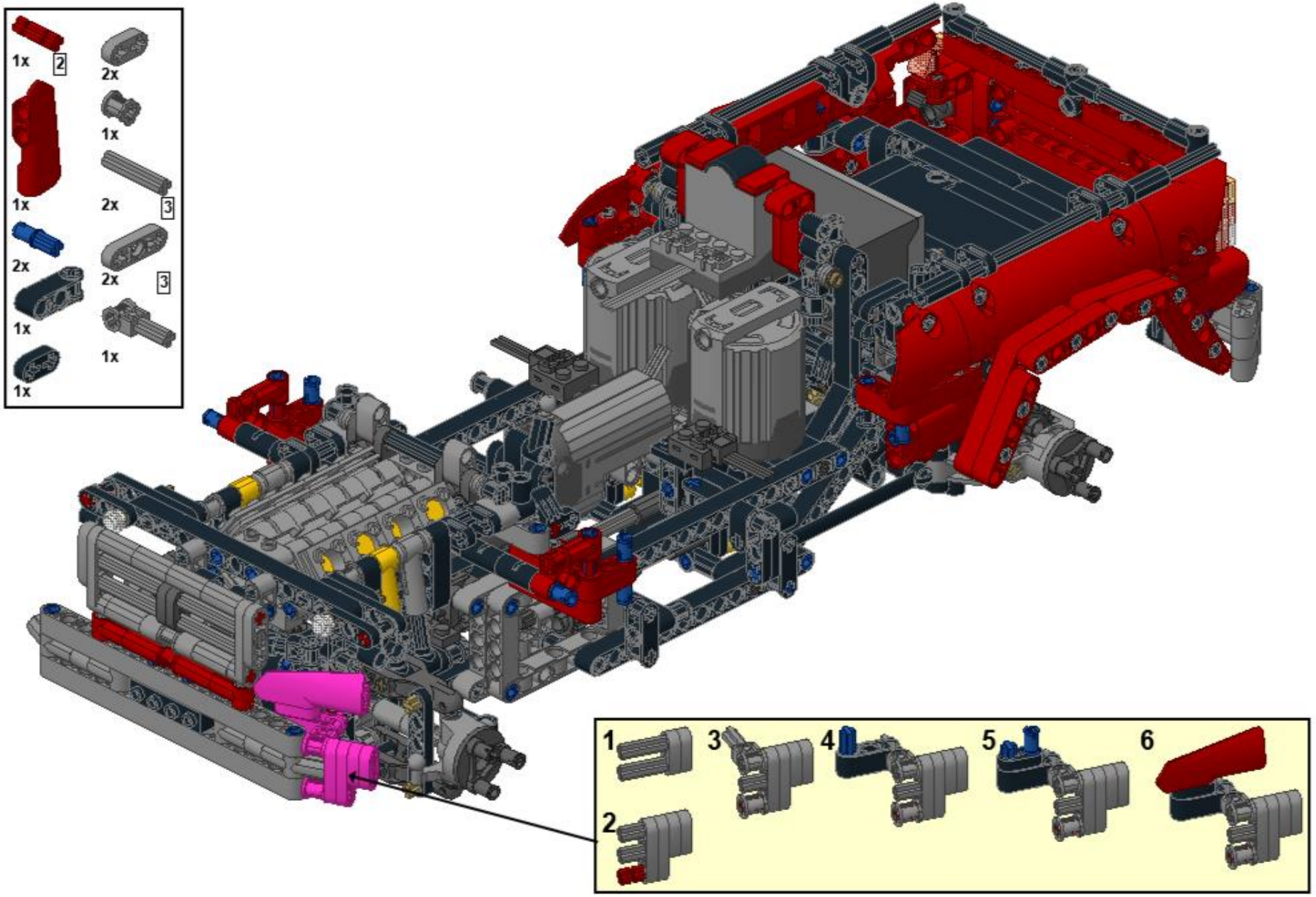

106

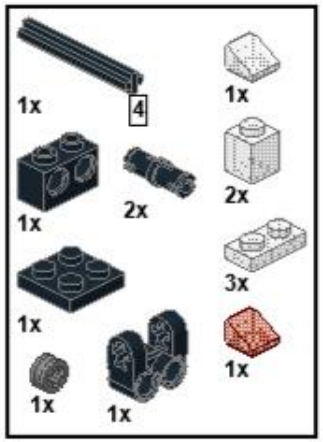

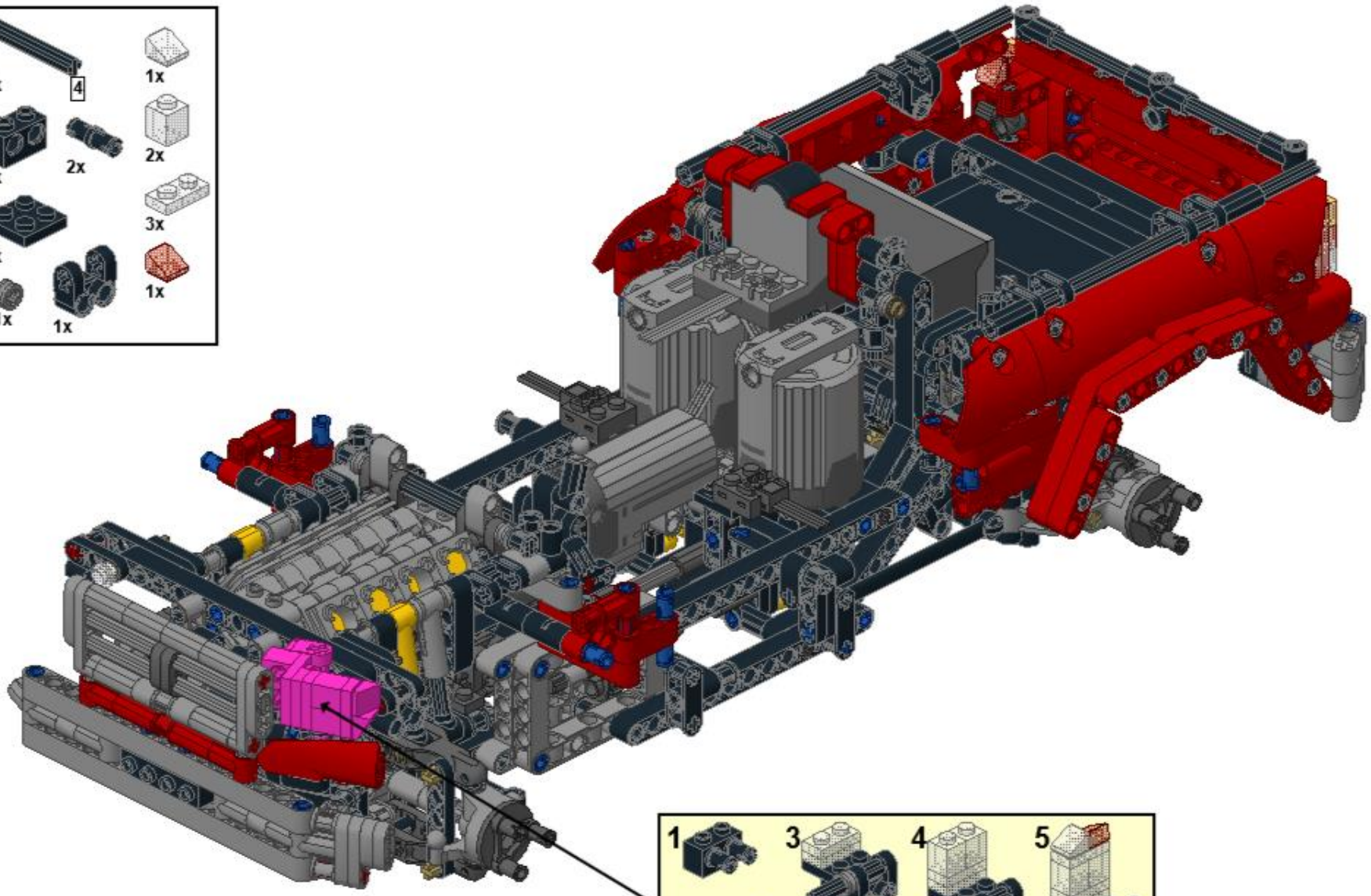

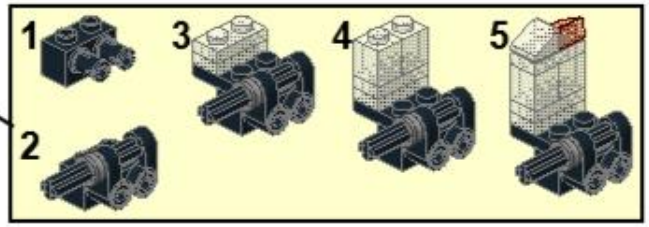

107

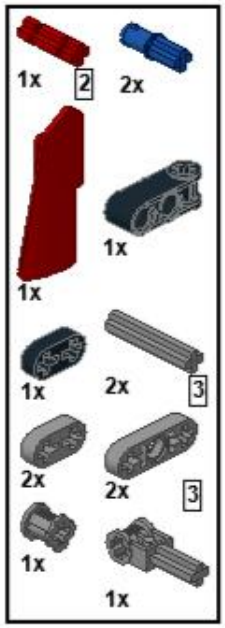

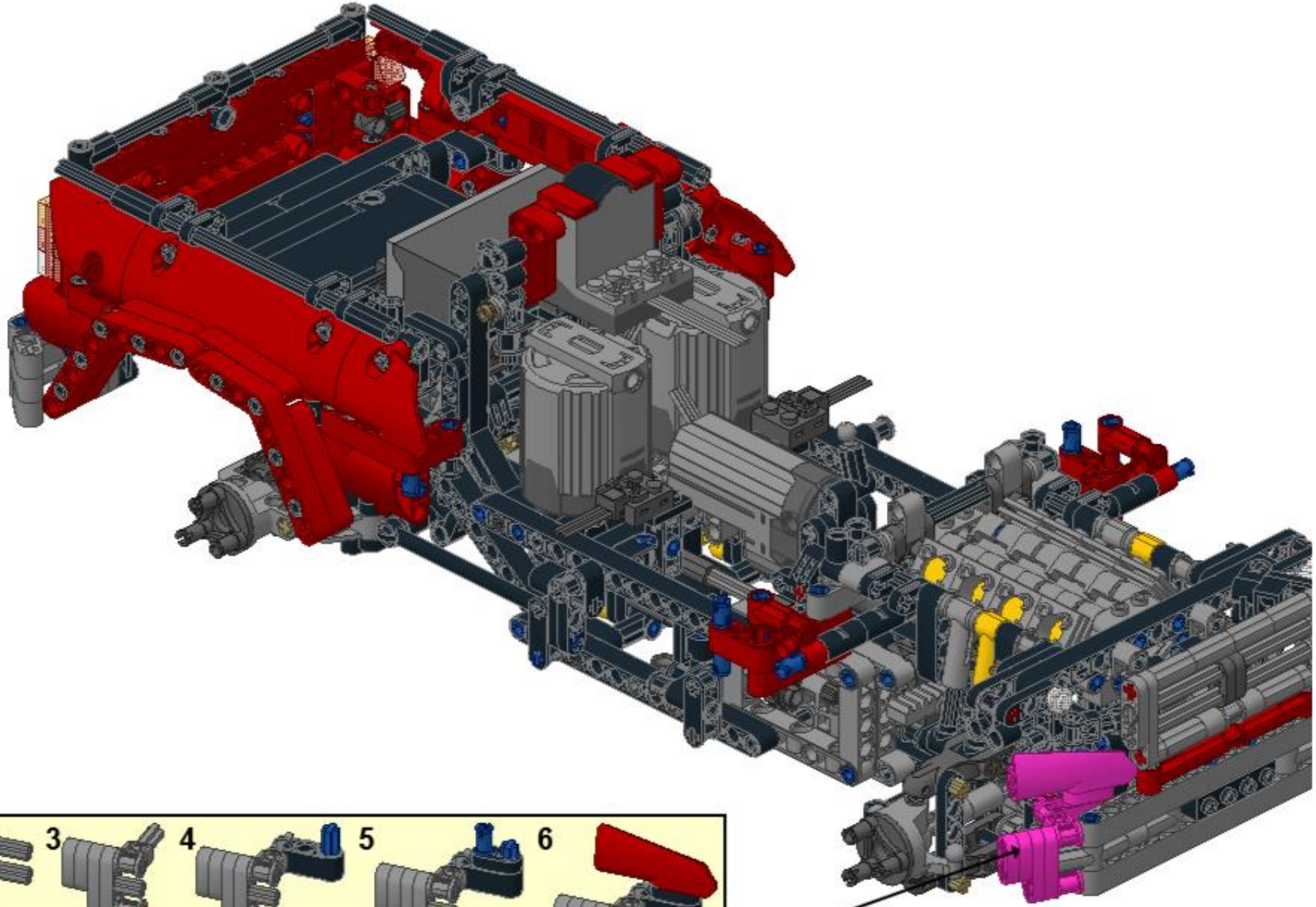

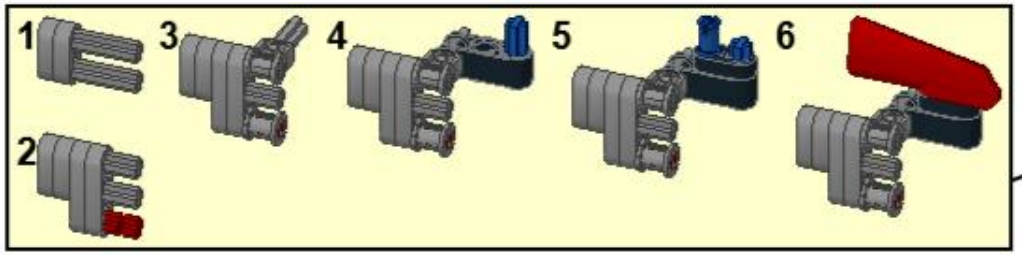

108

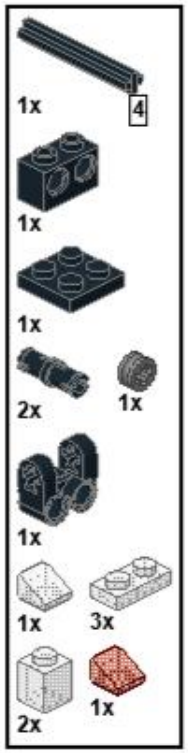

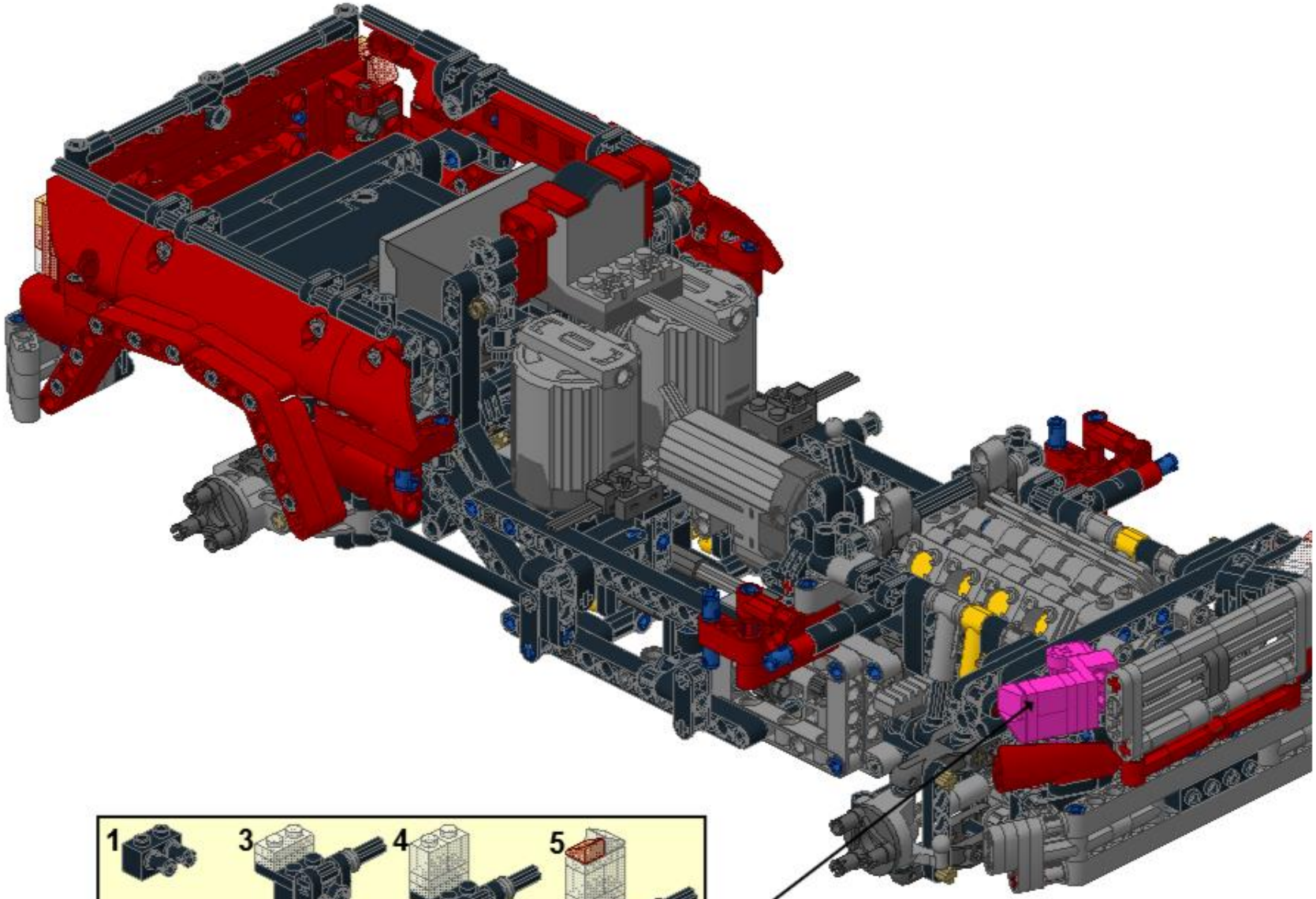

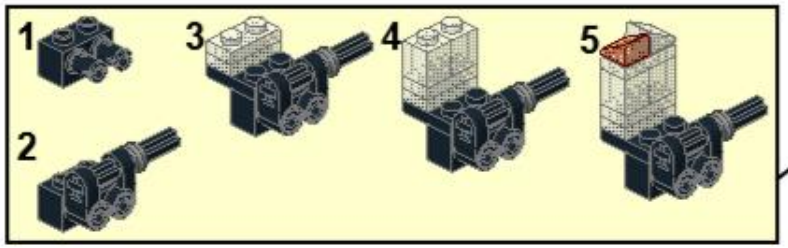

1

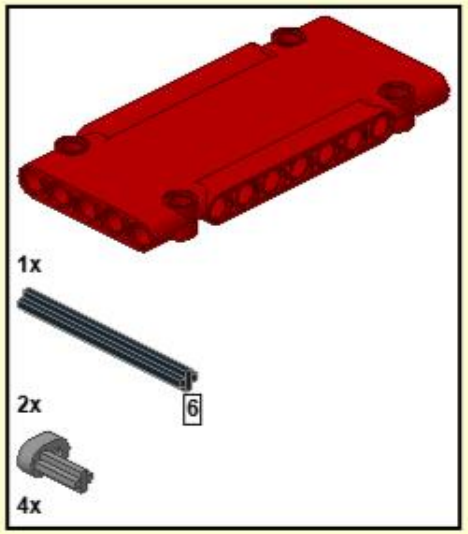

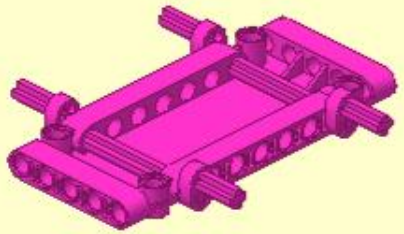

2

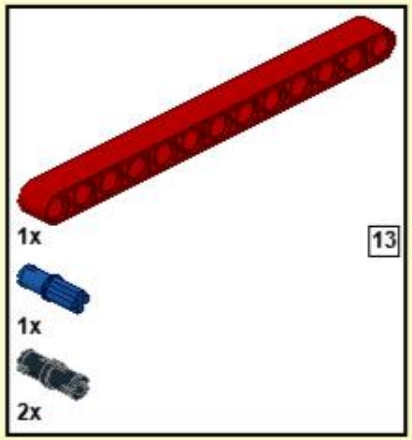

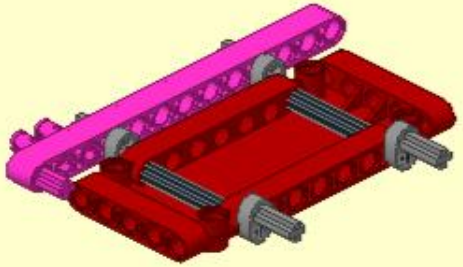

3

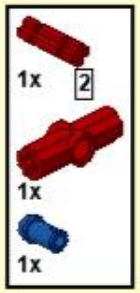

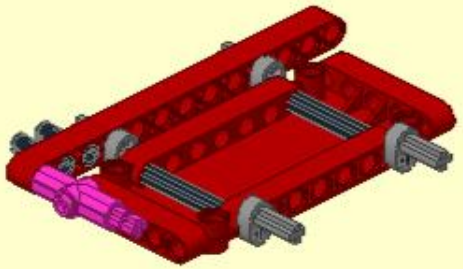

4

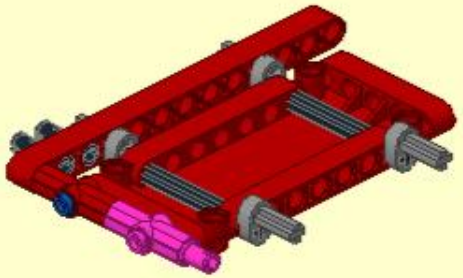

5

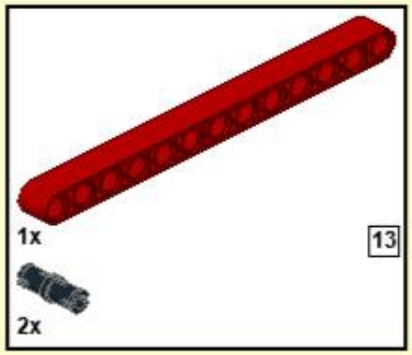

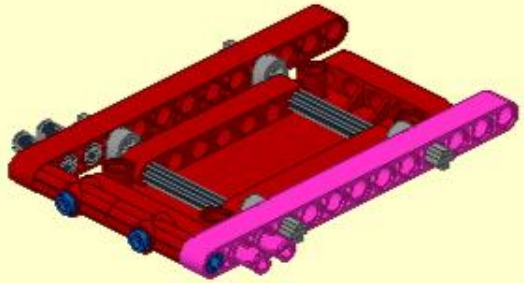

6

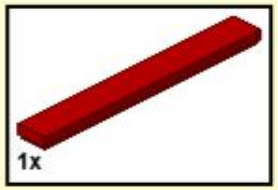

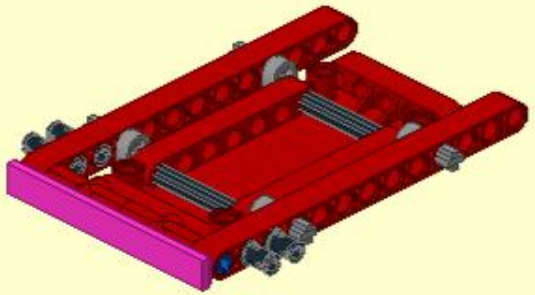

7

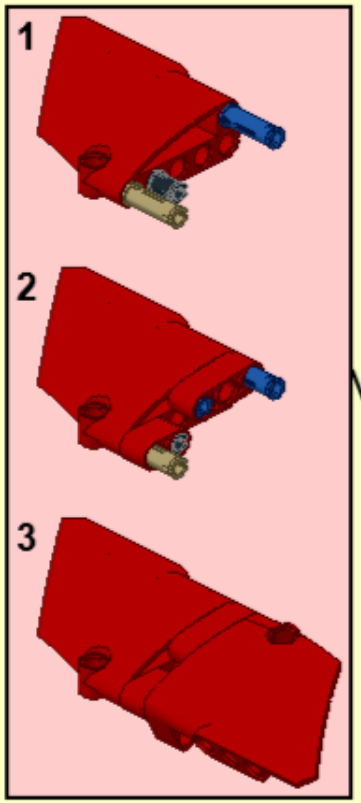

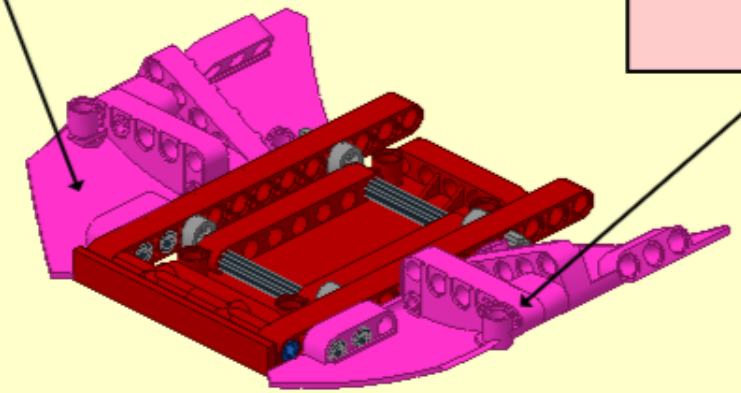

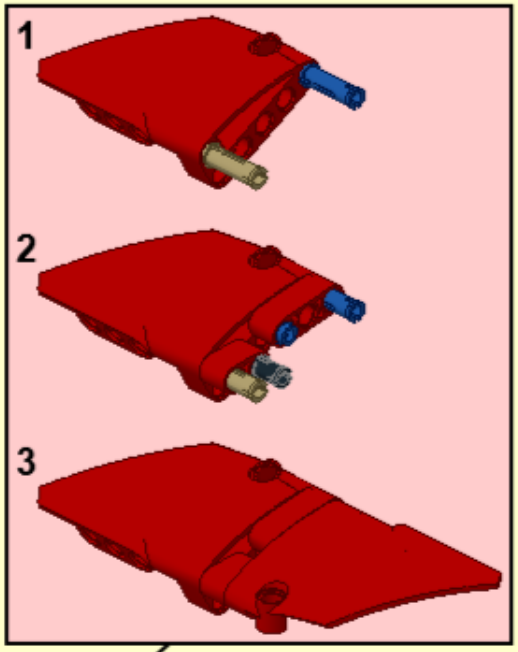

109

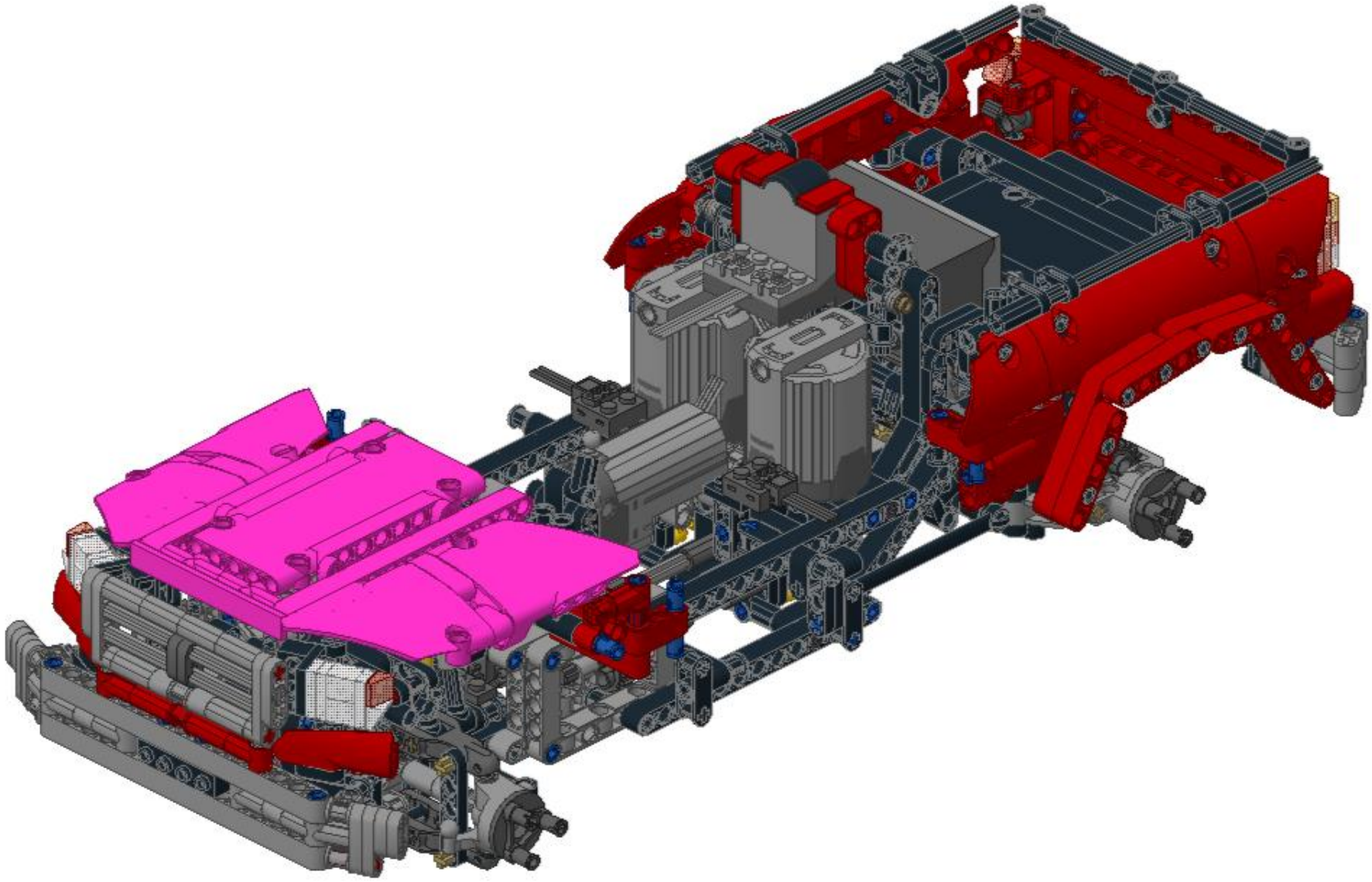

110

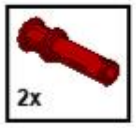

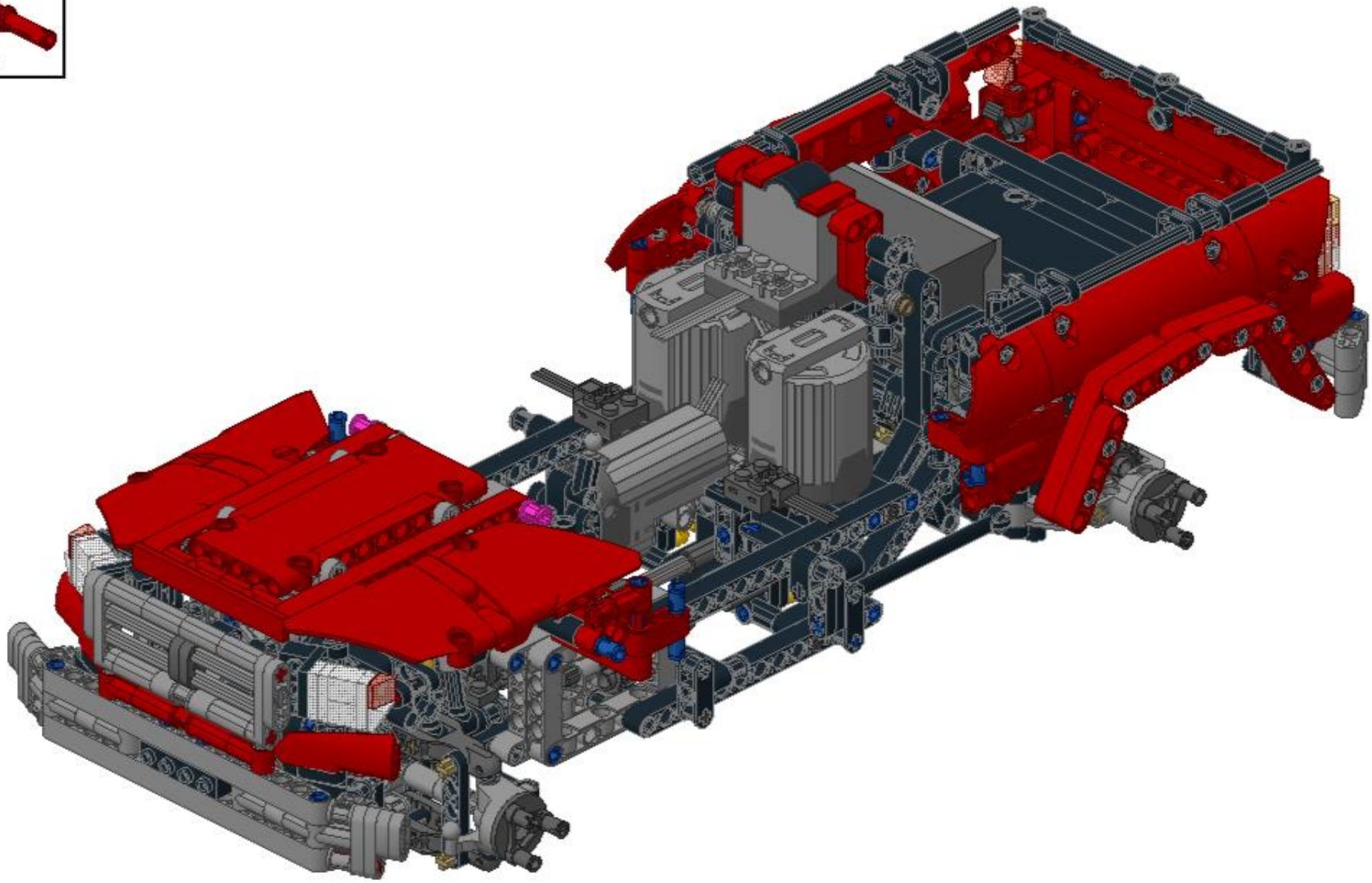

©jokey02

1

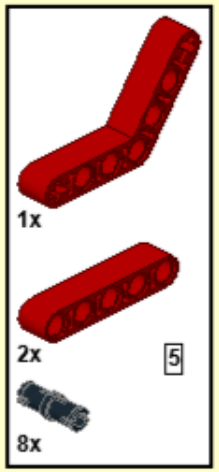

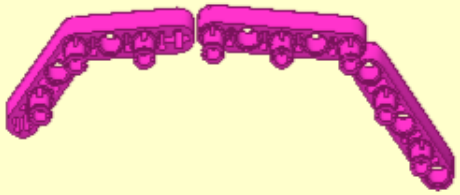

2

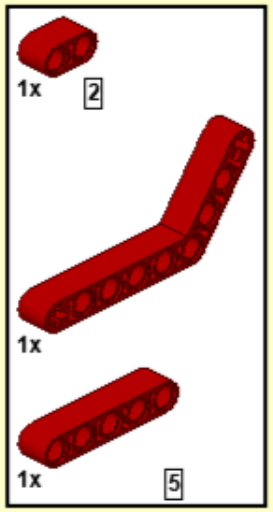

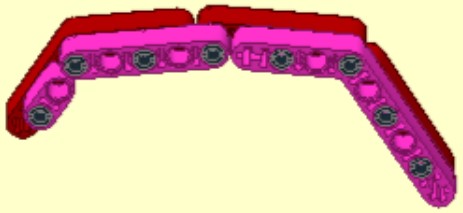

3

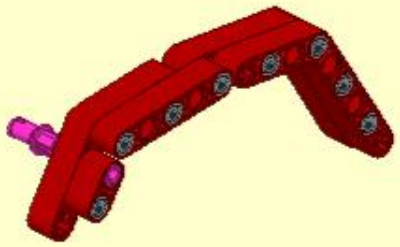

111

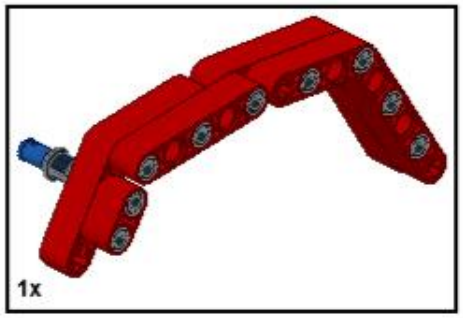

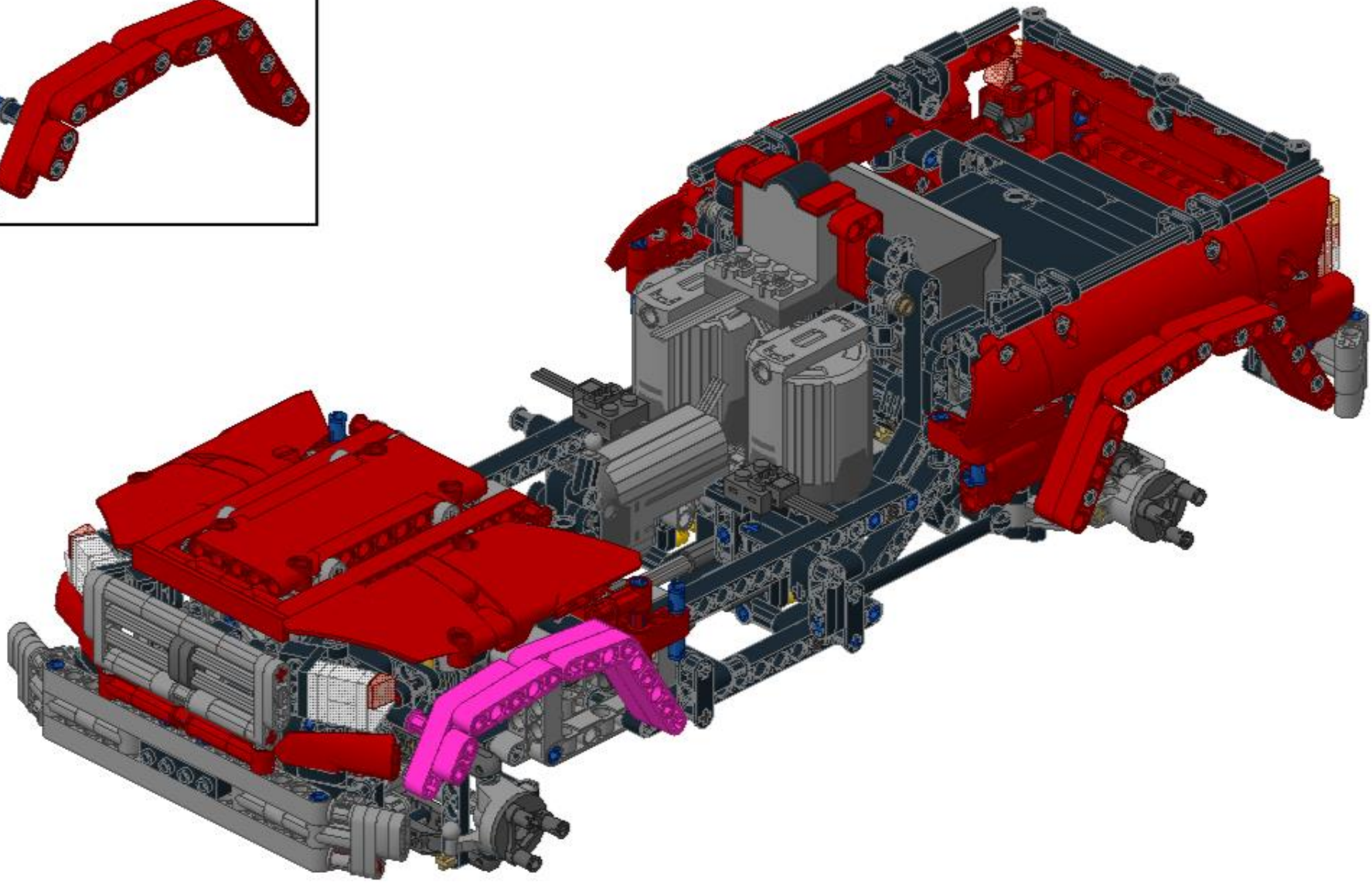

©jokey02

112

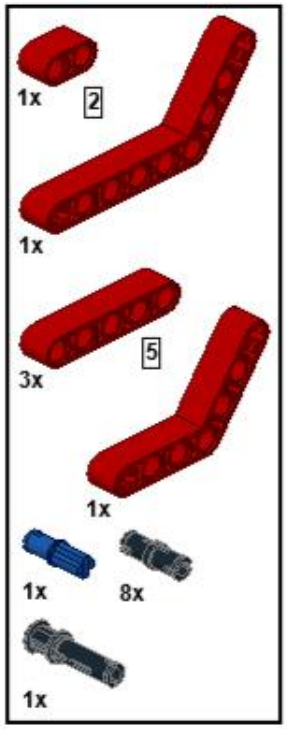

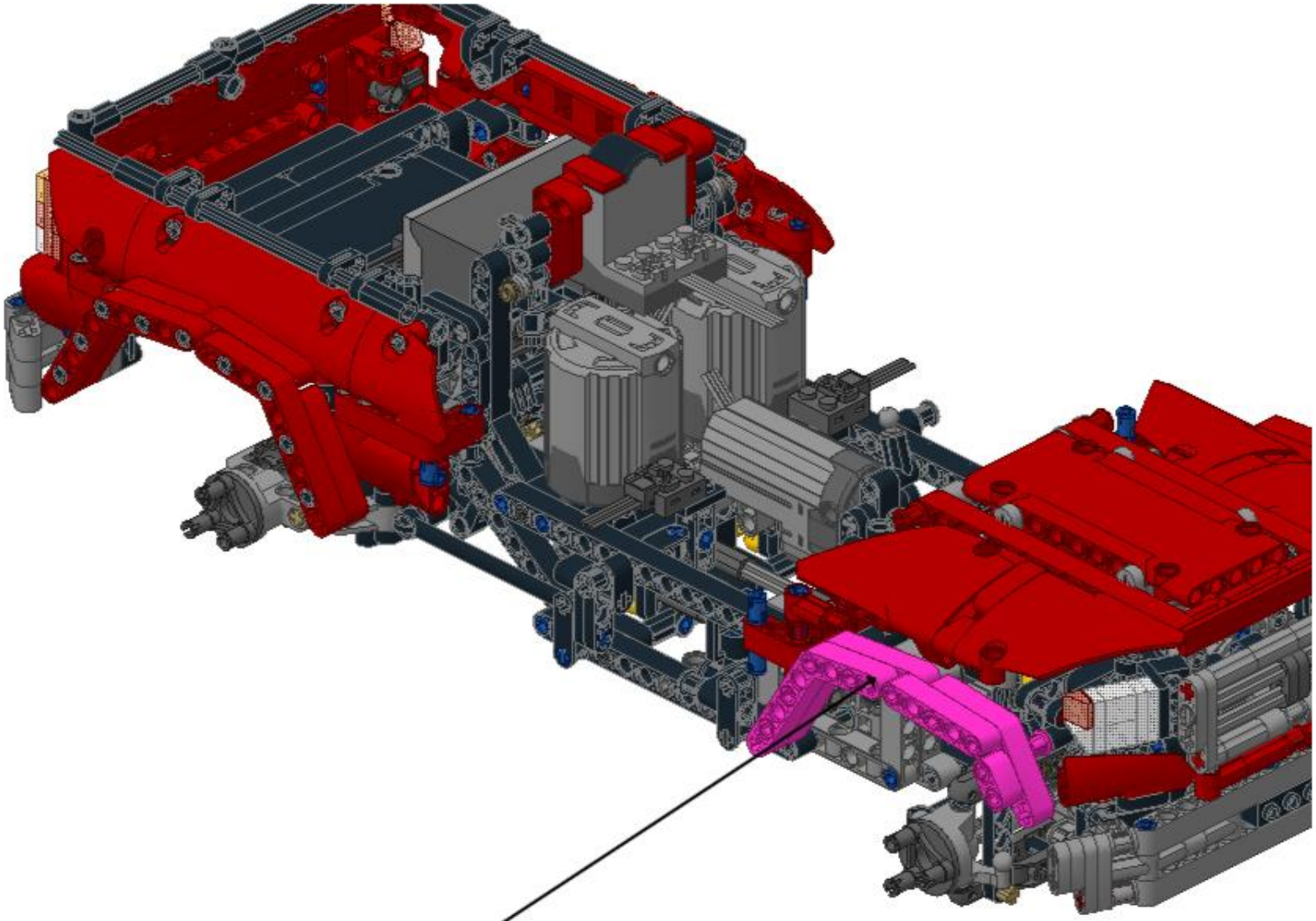

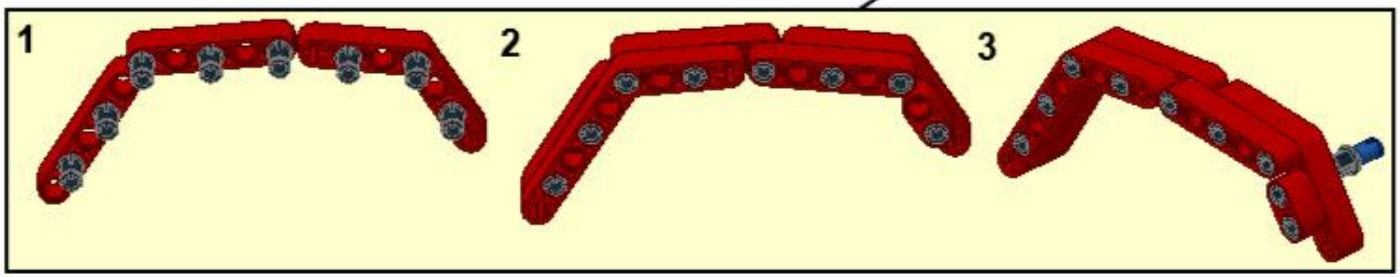

1

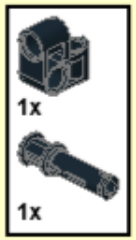

2

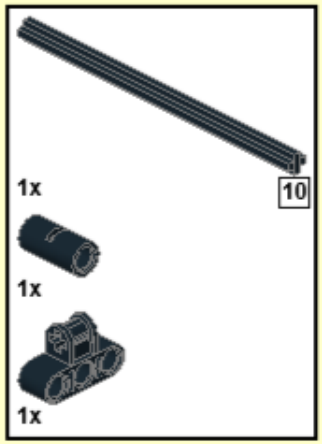

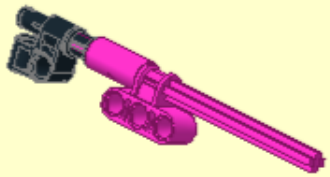

3

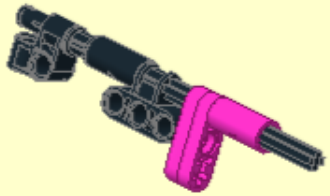

4

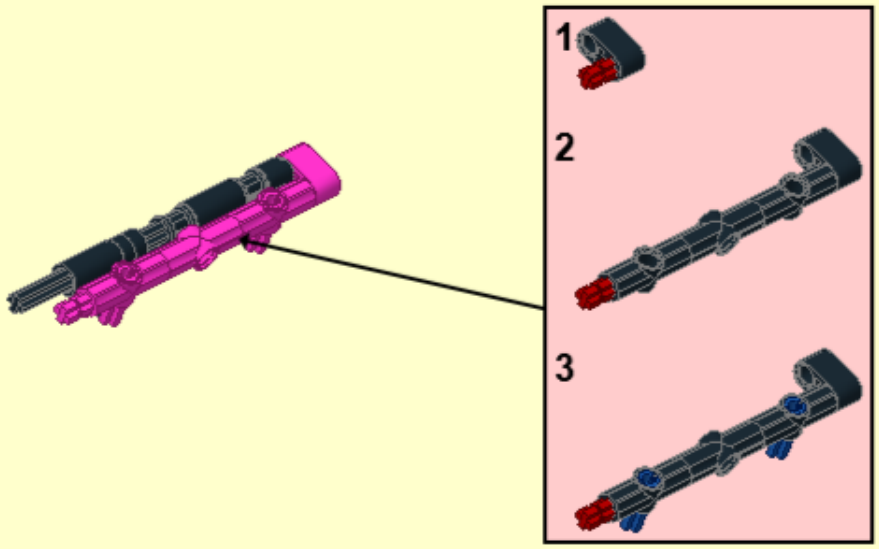

5

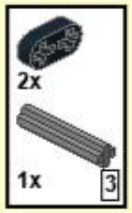

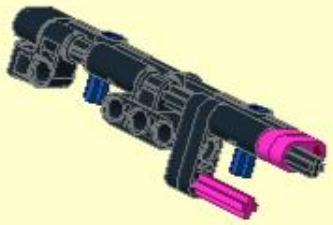

6

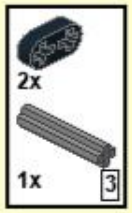

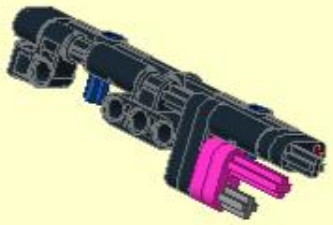

7

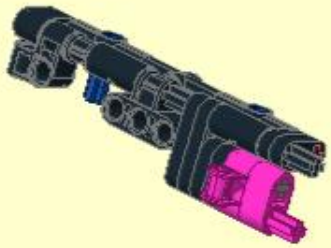

8

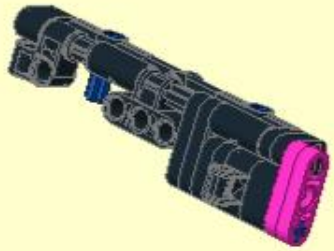

9

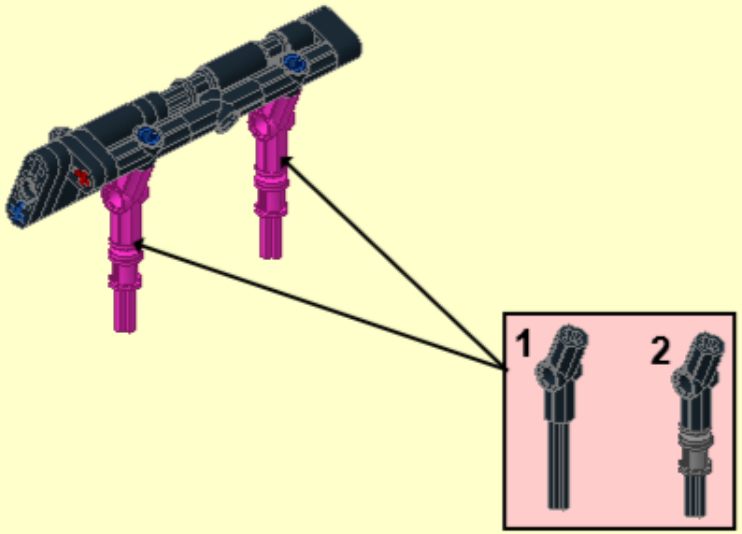

x2

10

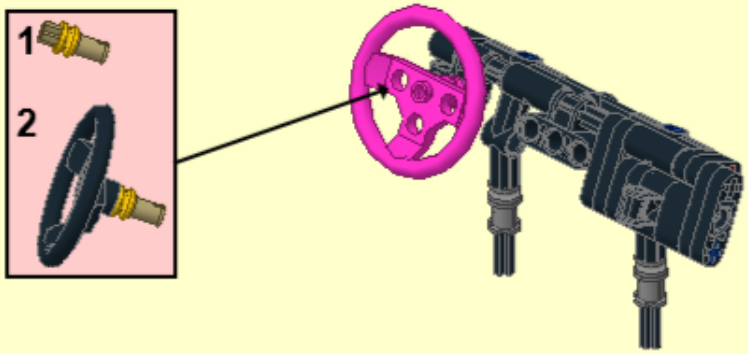

113

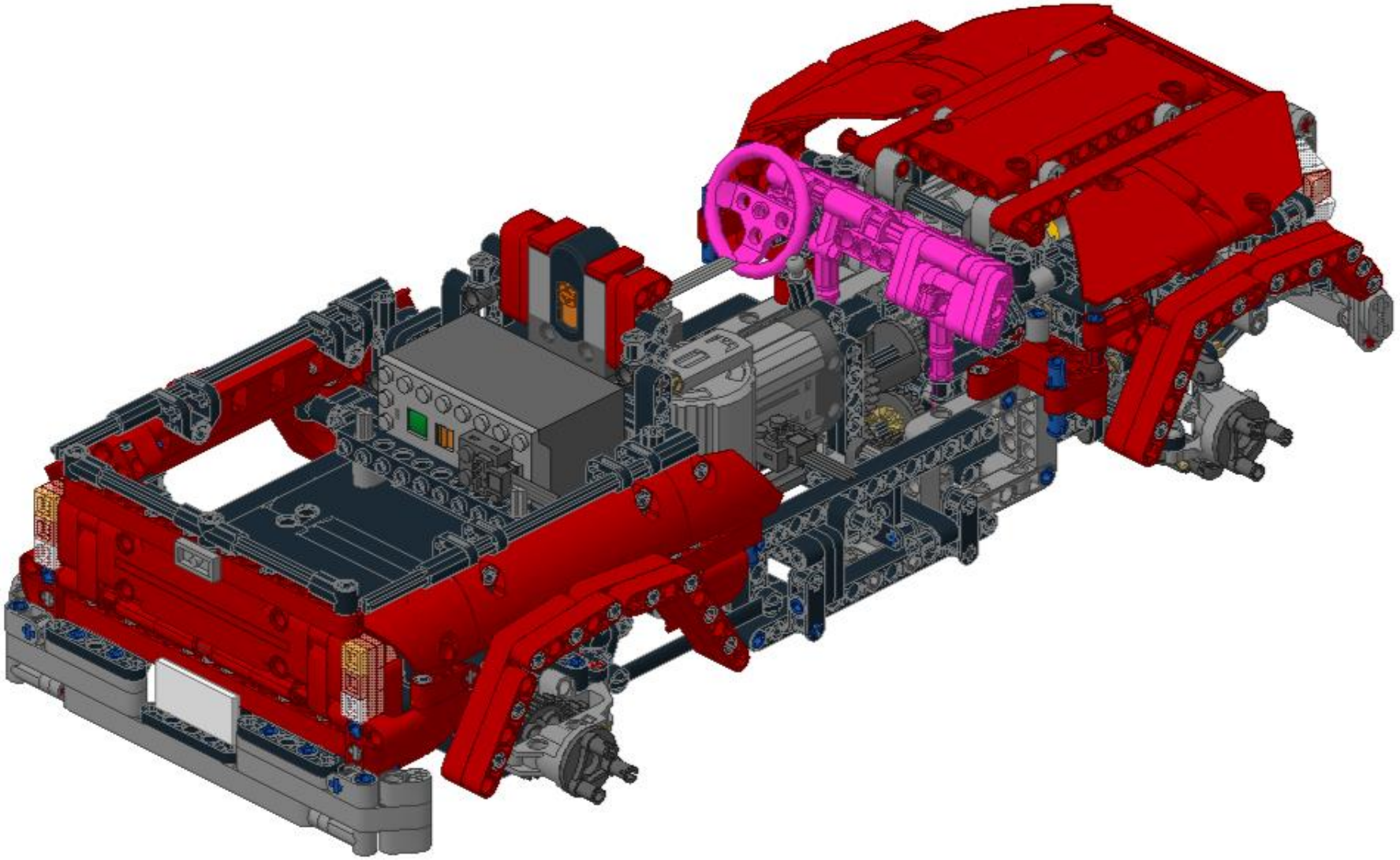

114

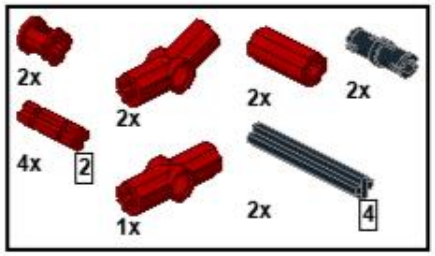

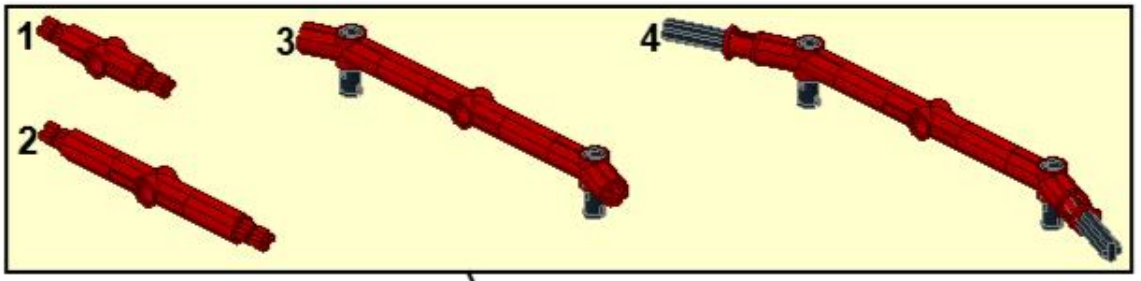

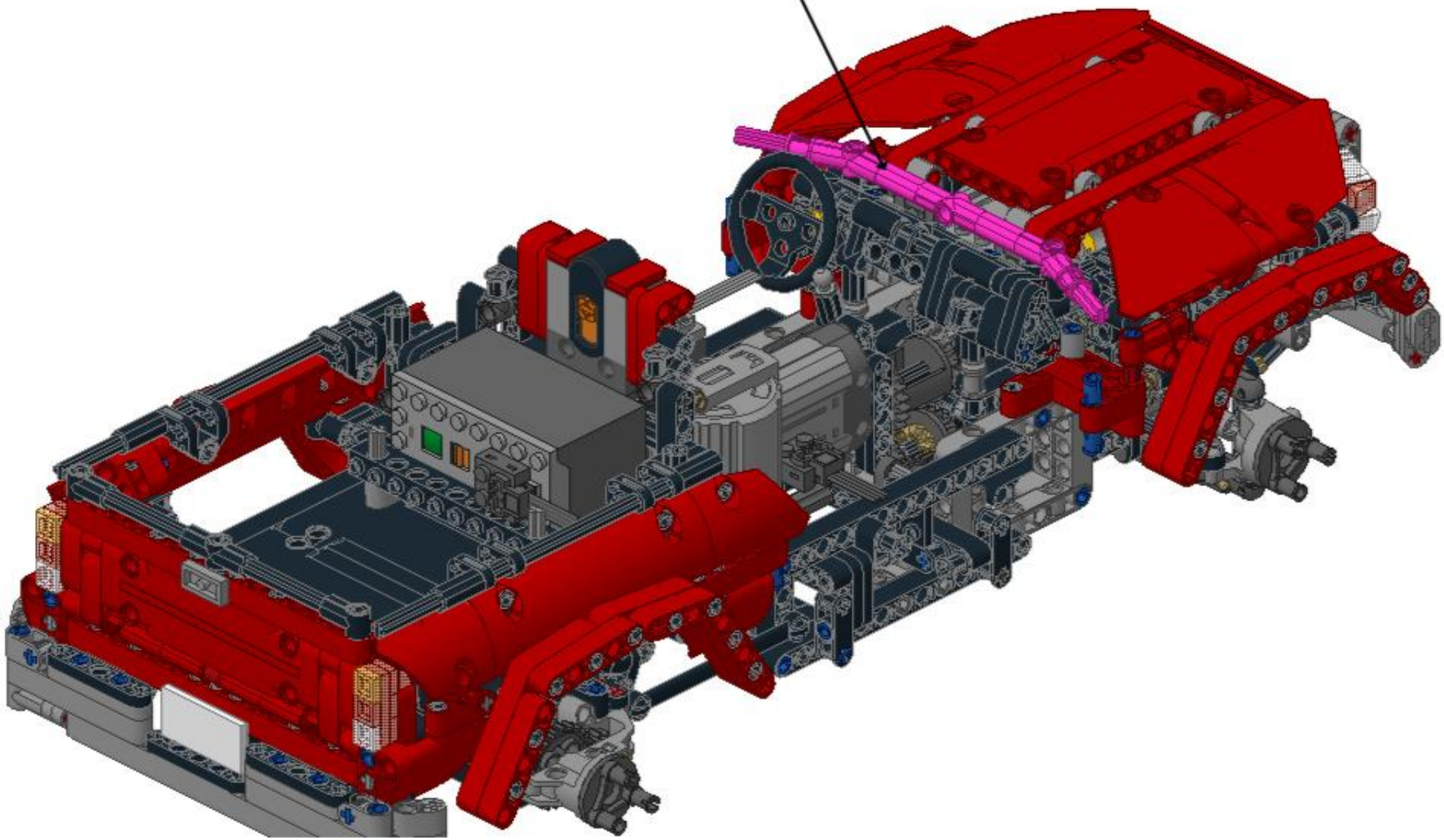

©jokey02

1

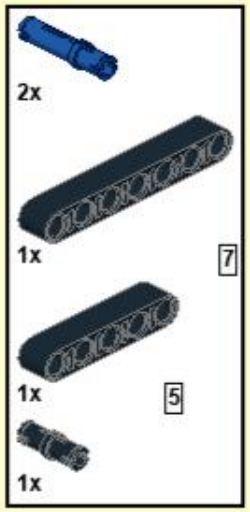

2

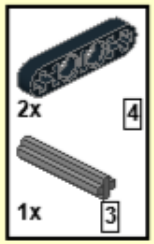

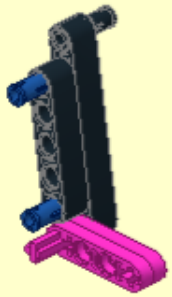

3

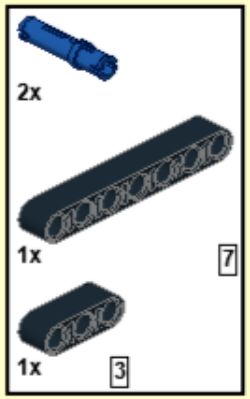

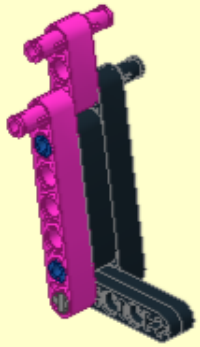

4

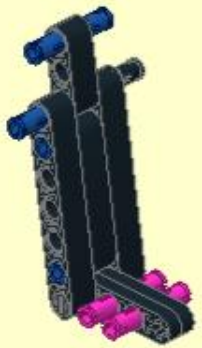

5

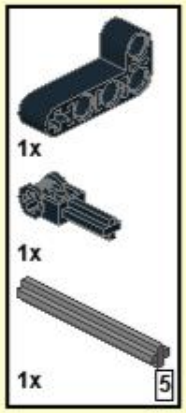

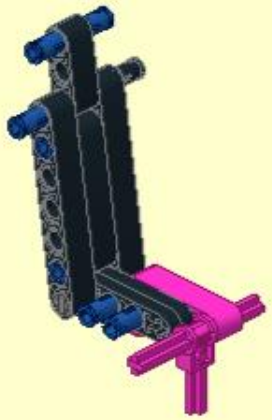

6

7

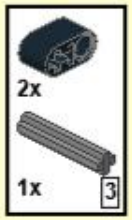

8

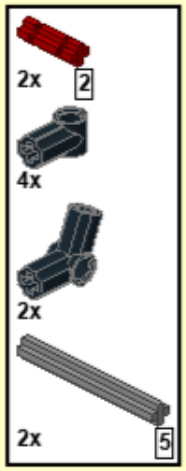

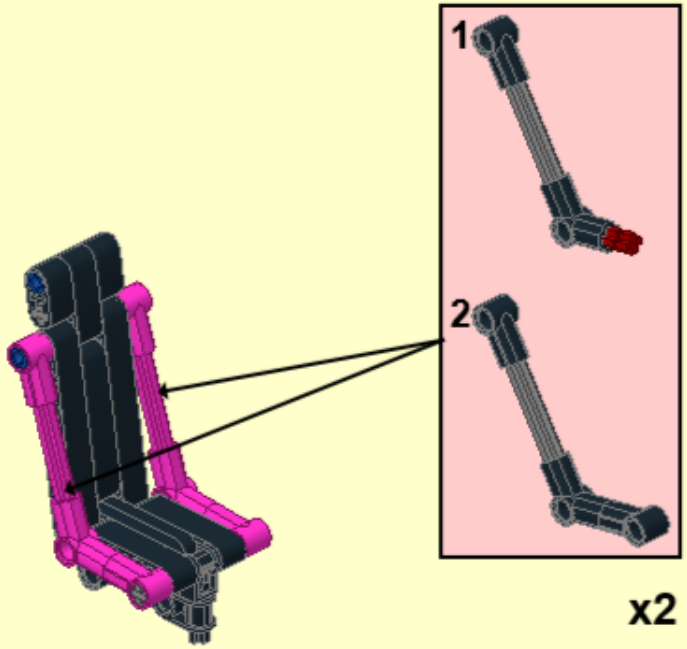

115

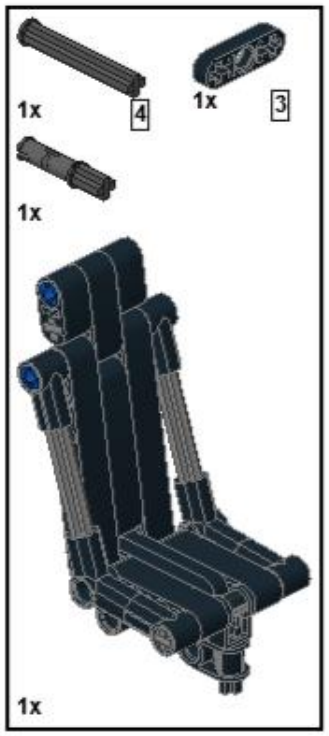

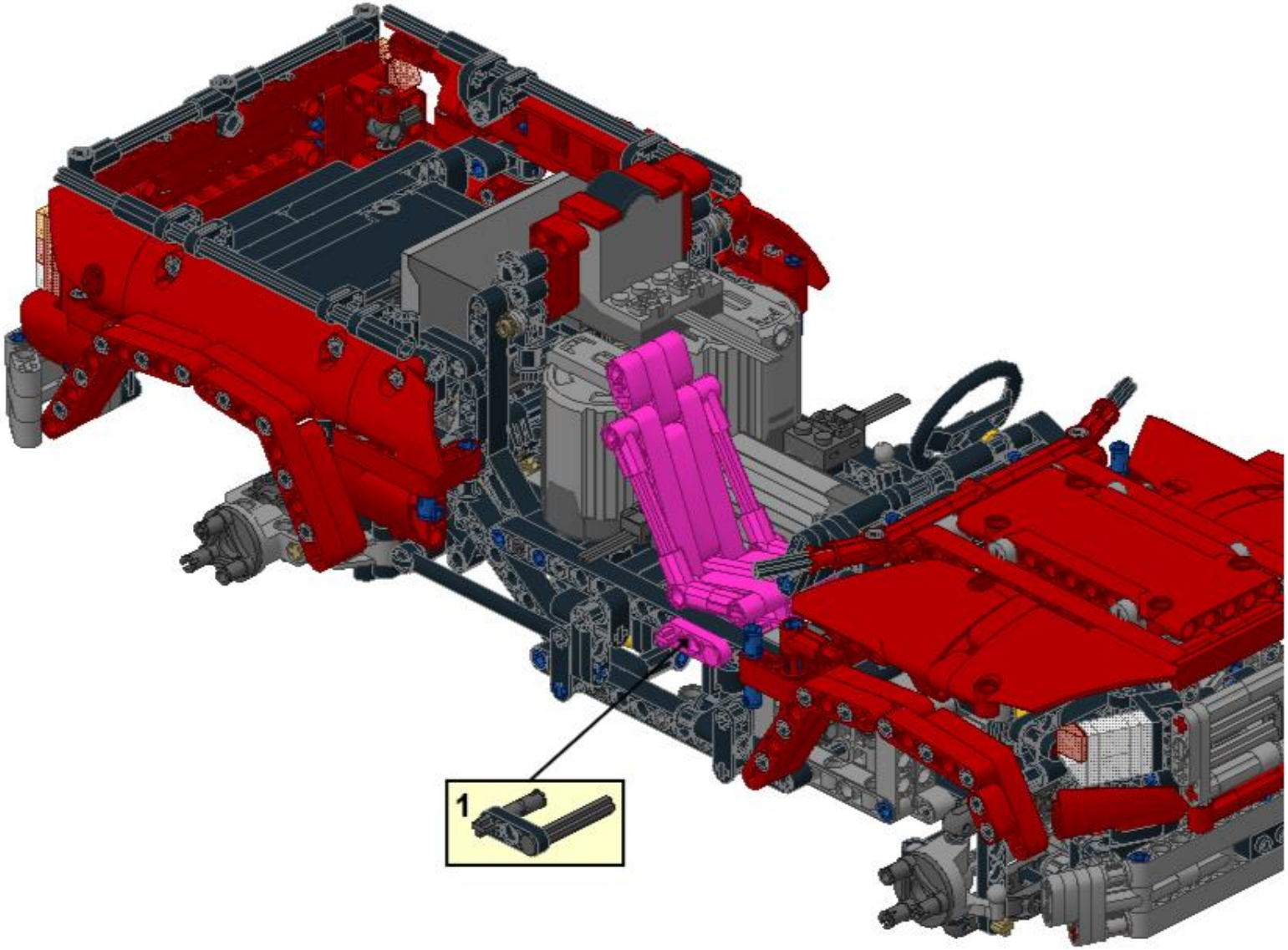

1

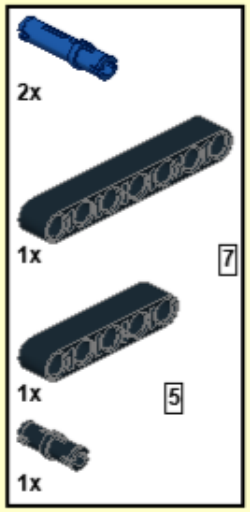

2

3

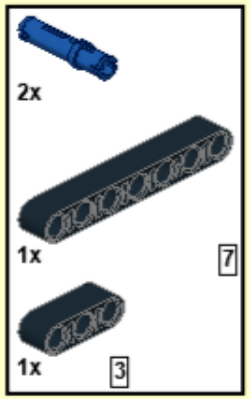

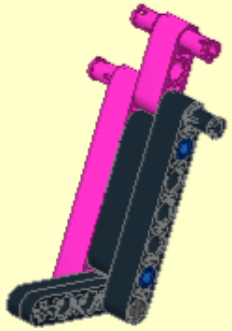

4

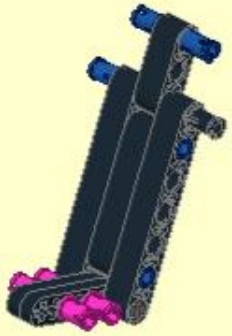

5

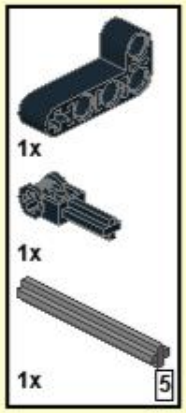

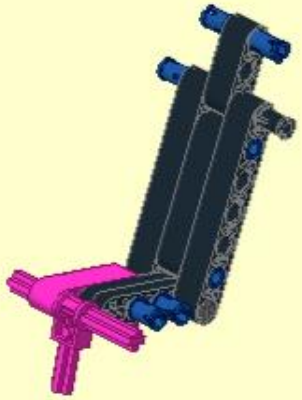

6

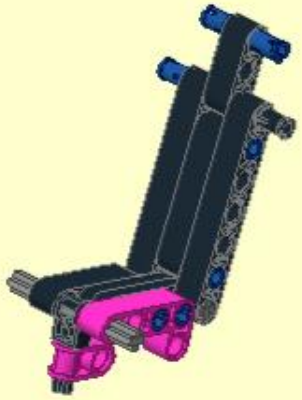

7

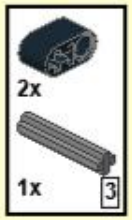

8

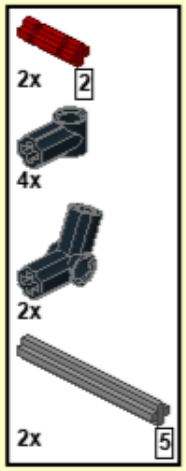

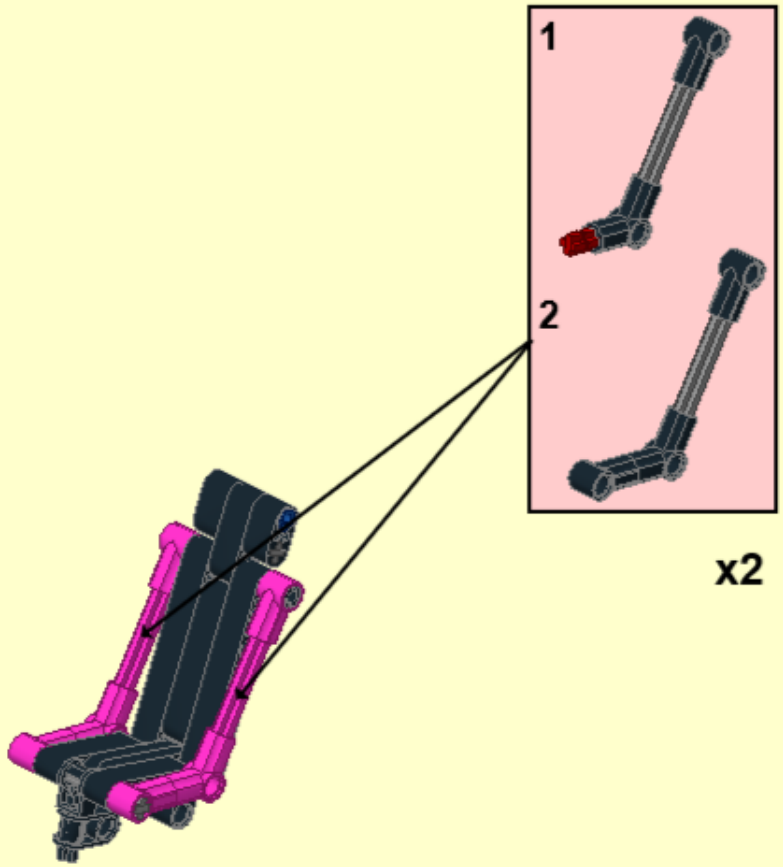

116

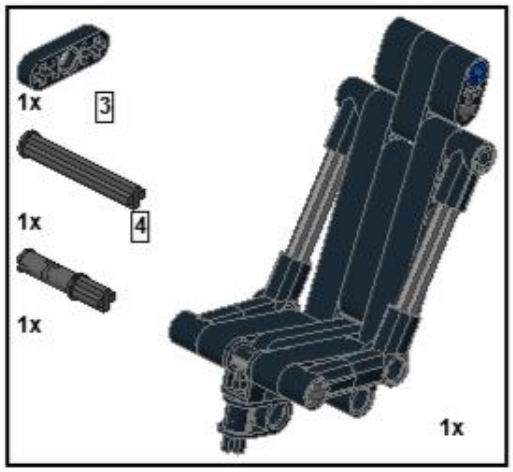

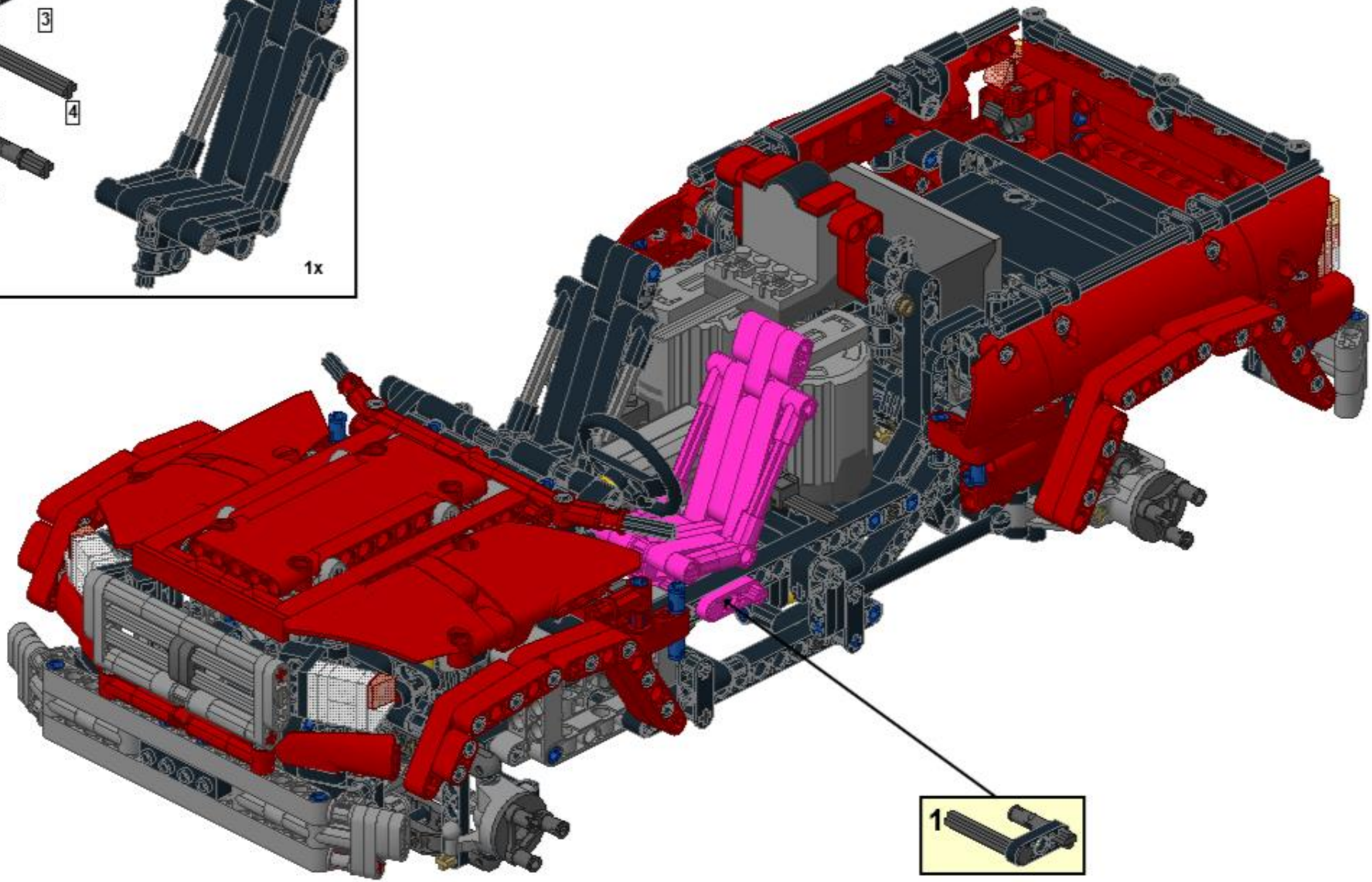

©jokey02

1

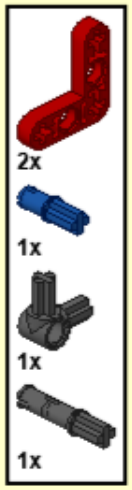

©jokey02

2

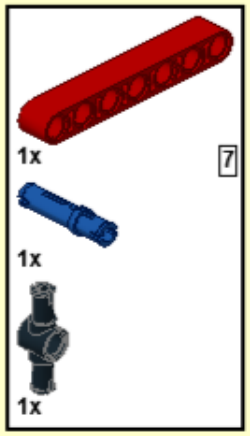

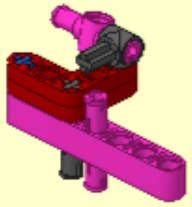

3

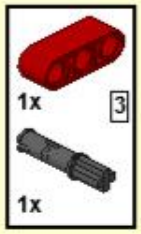

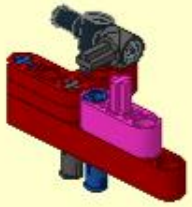

4

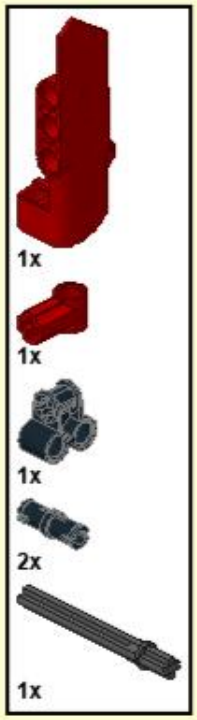

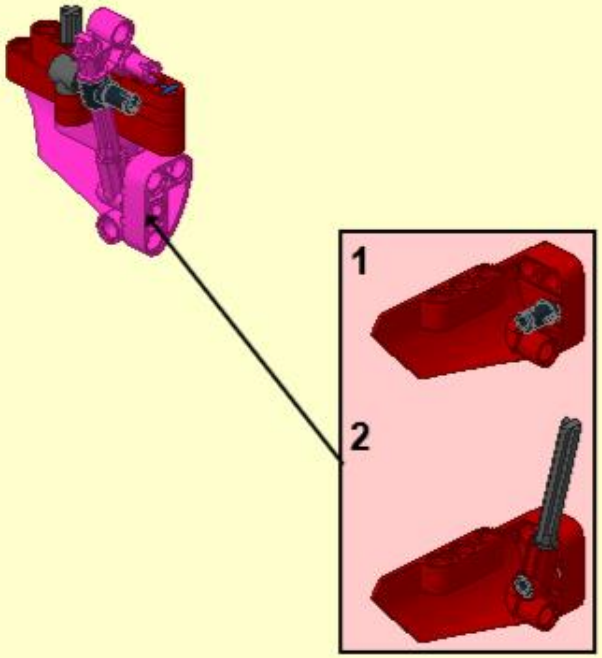

5

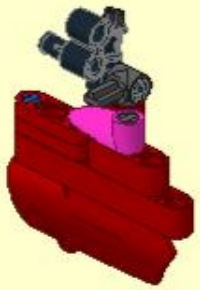

6

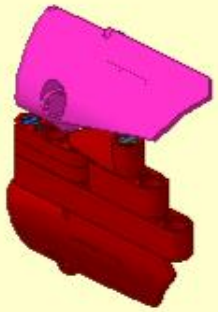

117

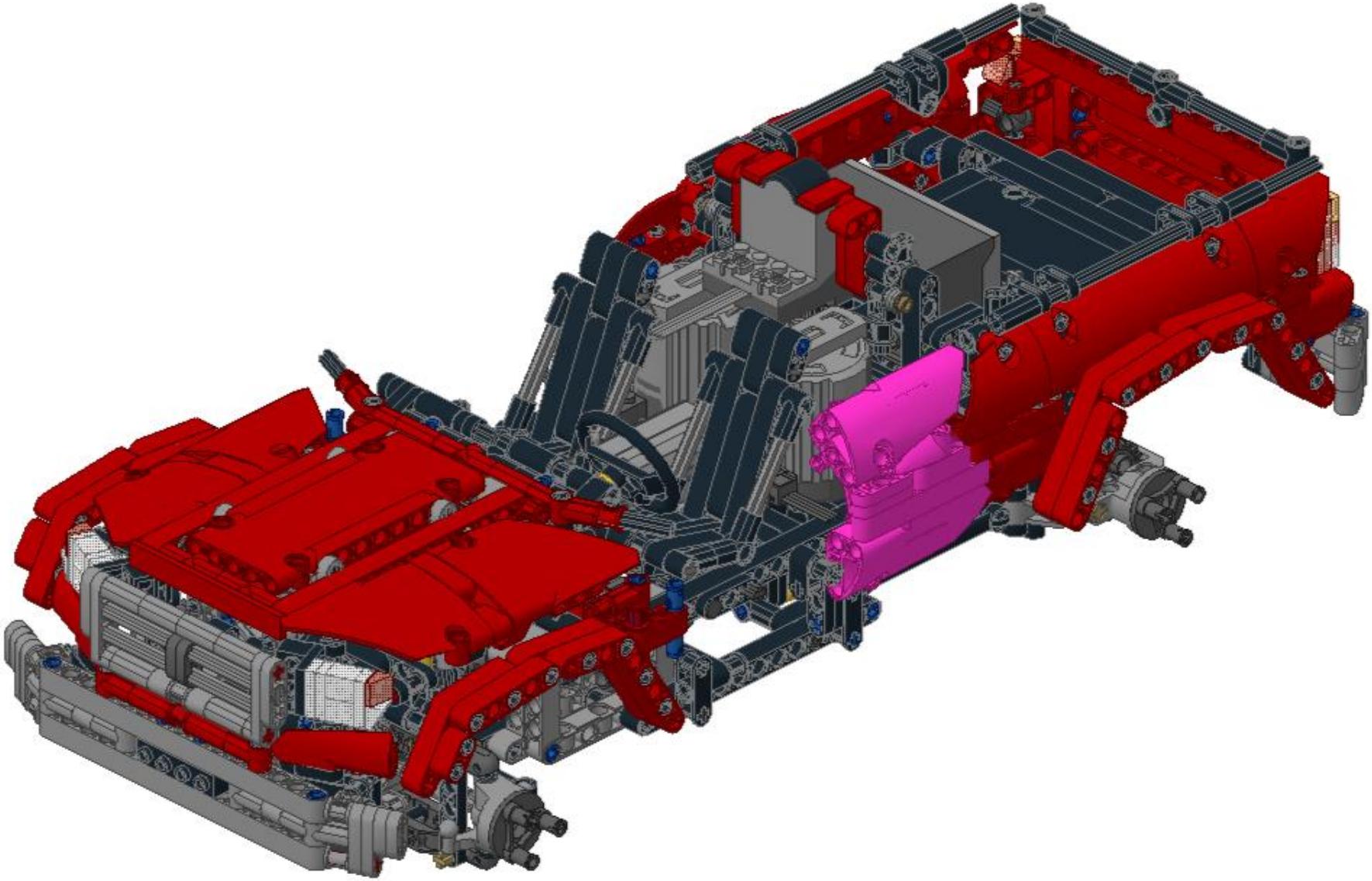

118

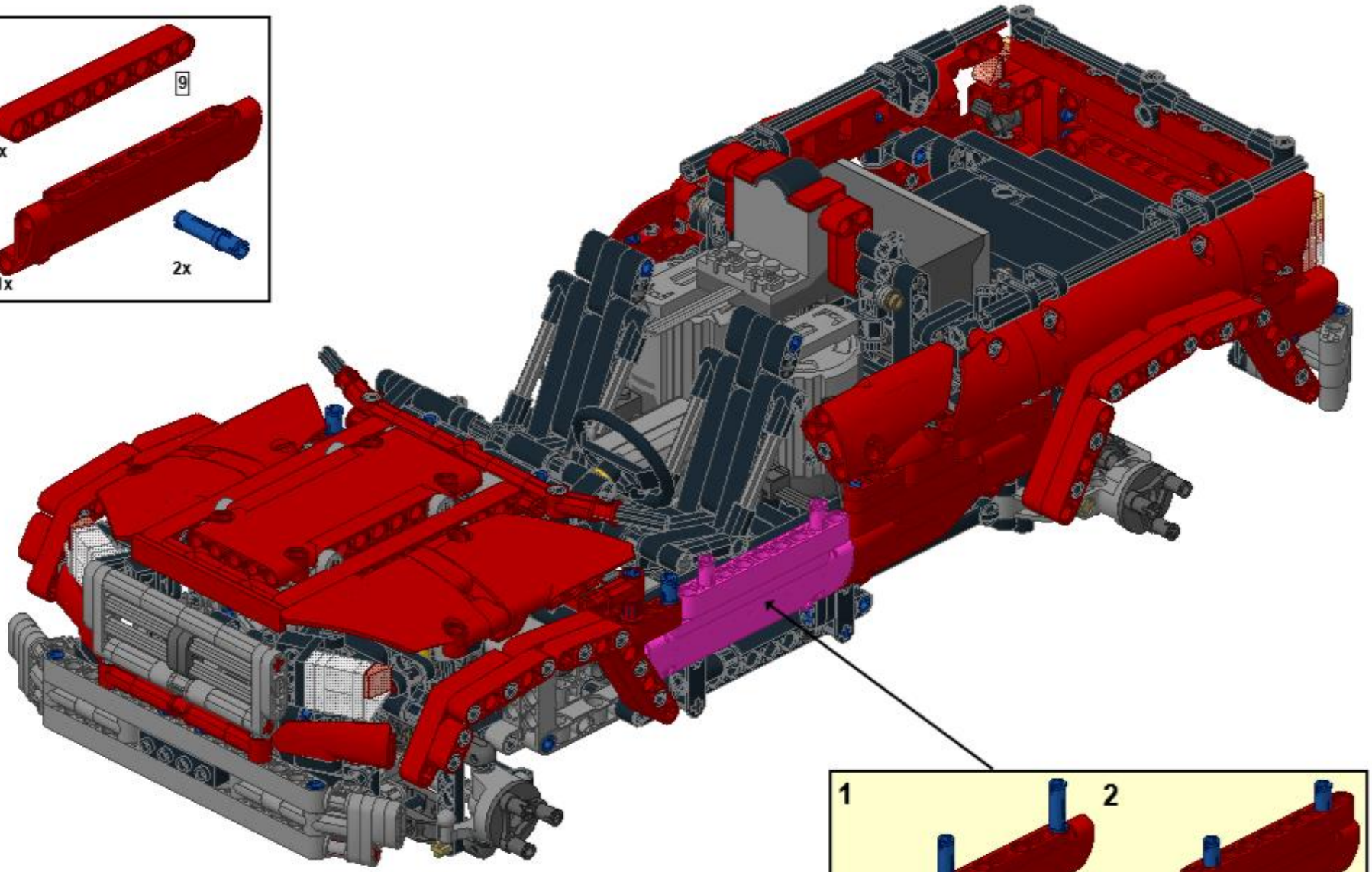

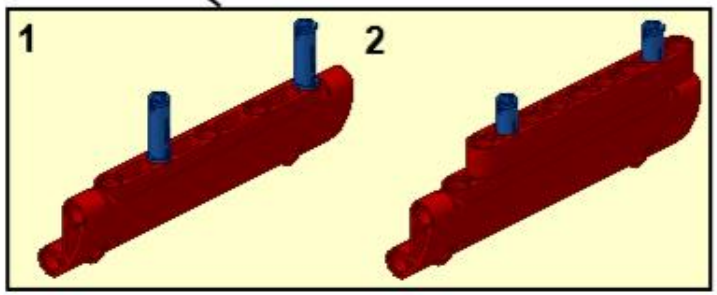

119

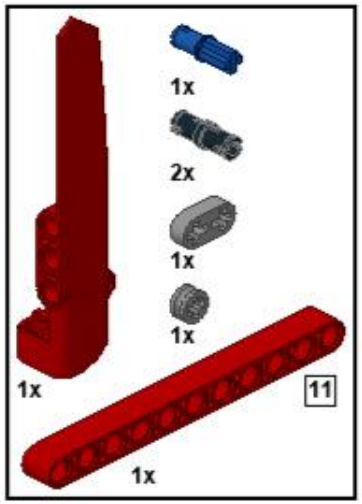

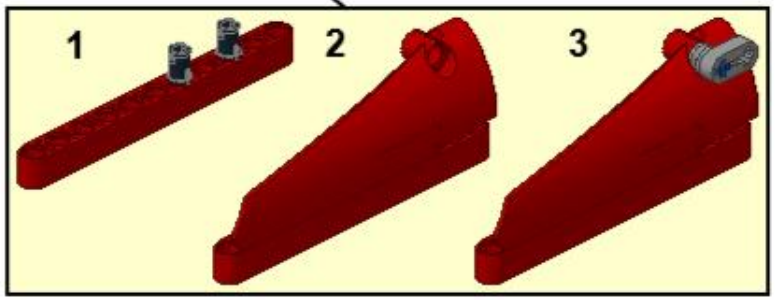

120

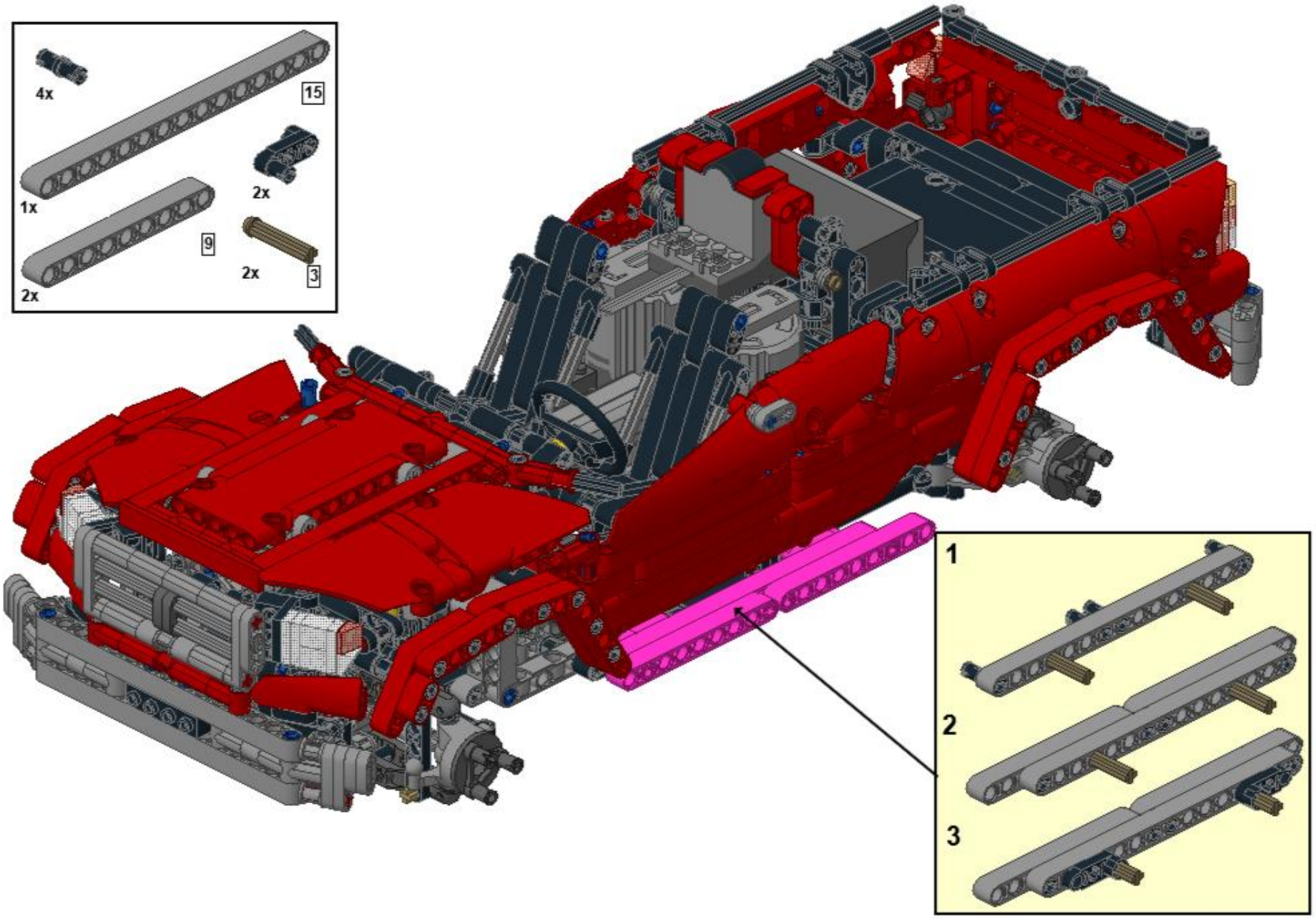

1

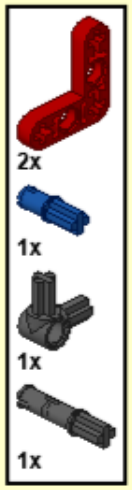

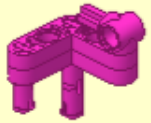

2

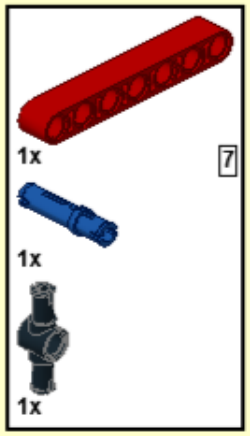

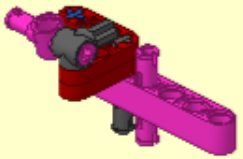

3

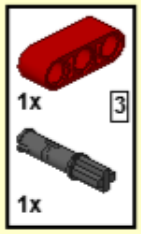

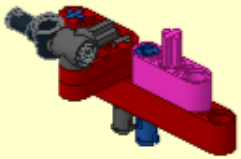

4

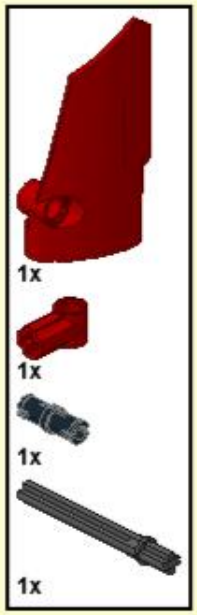

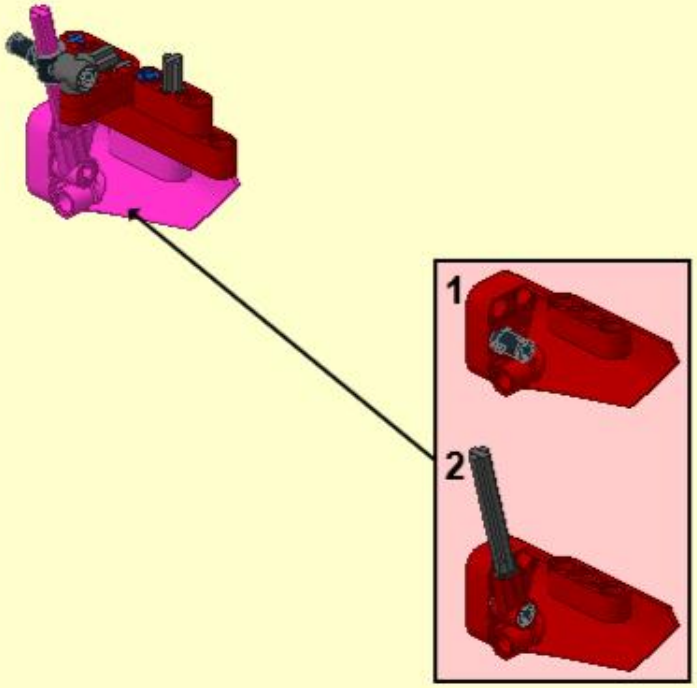

5

6

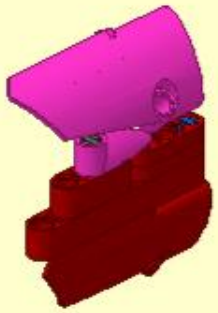

7

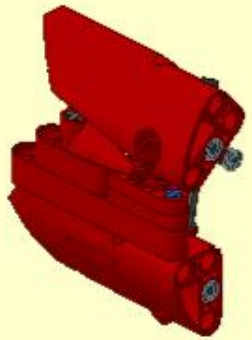

121

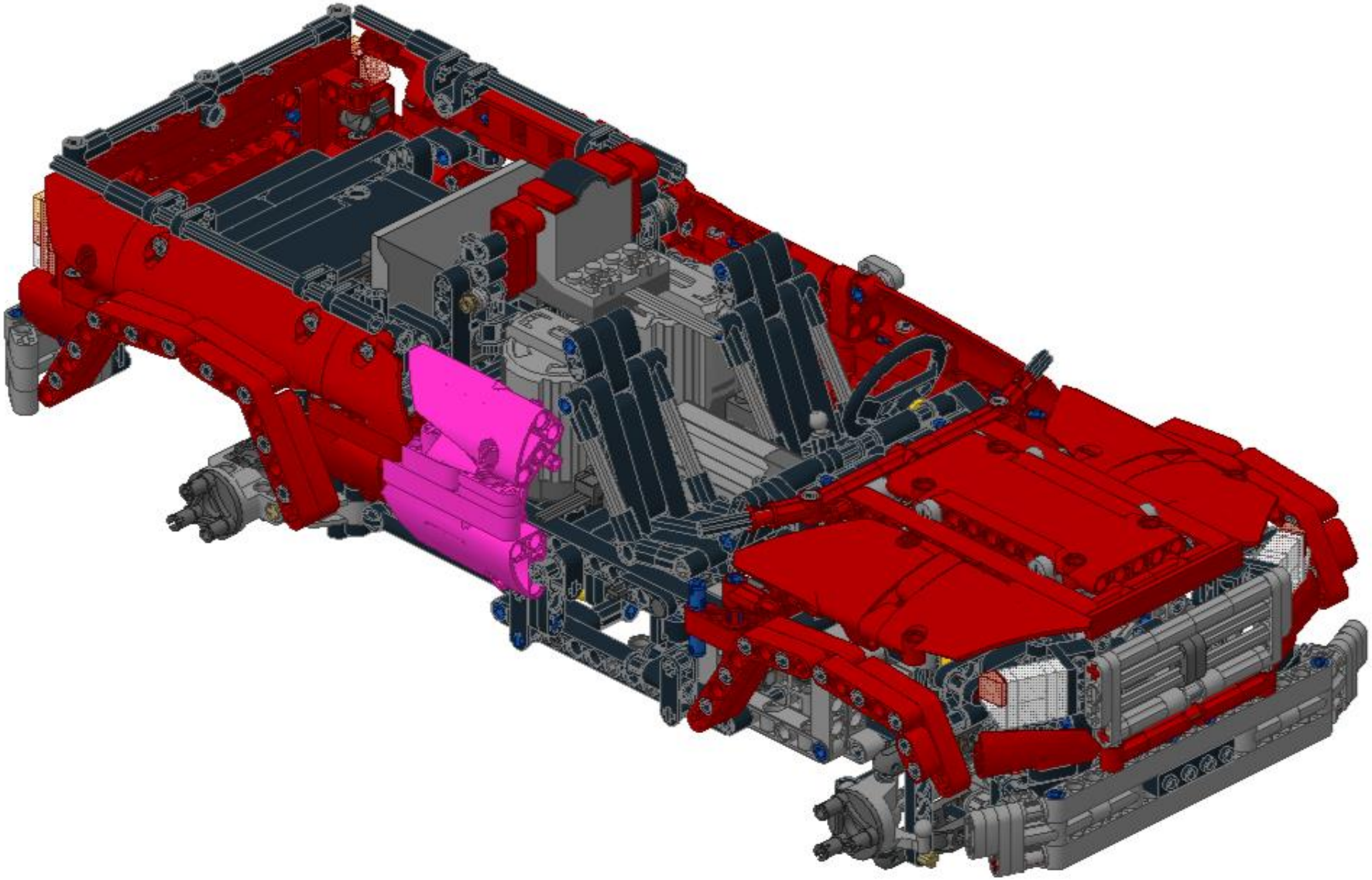

122

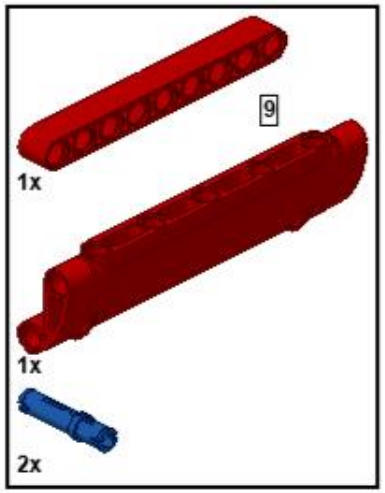

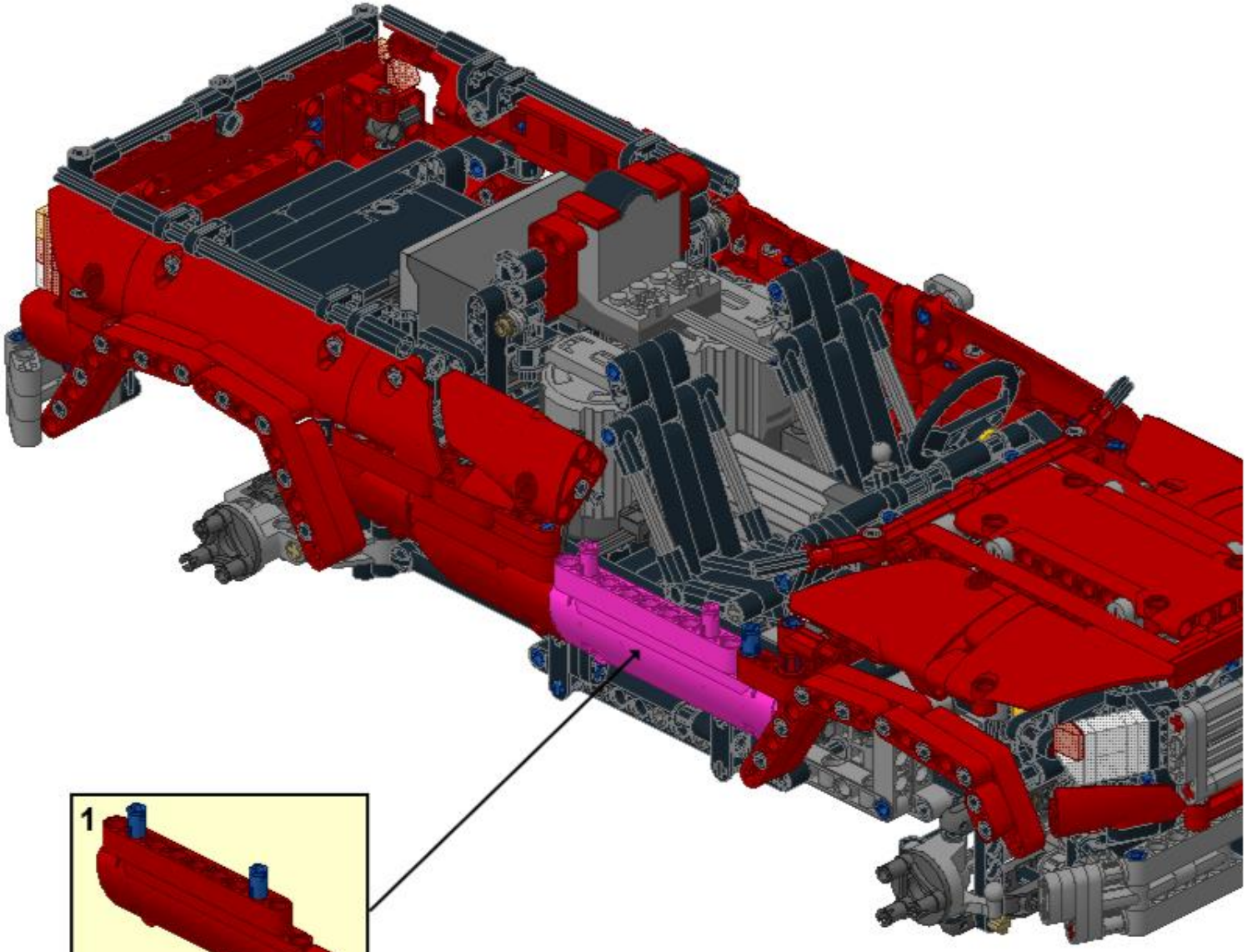

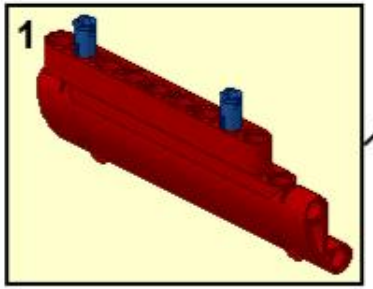

©jokey02

123

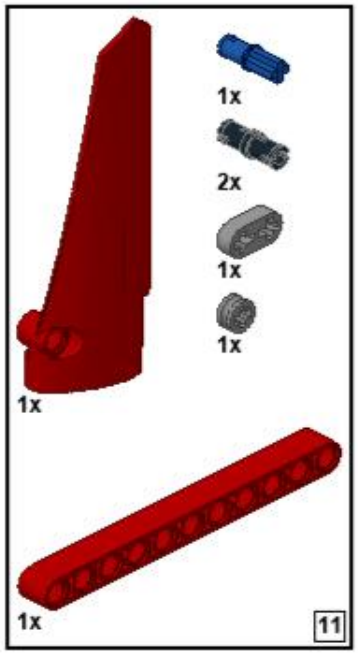

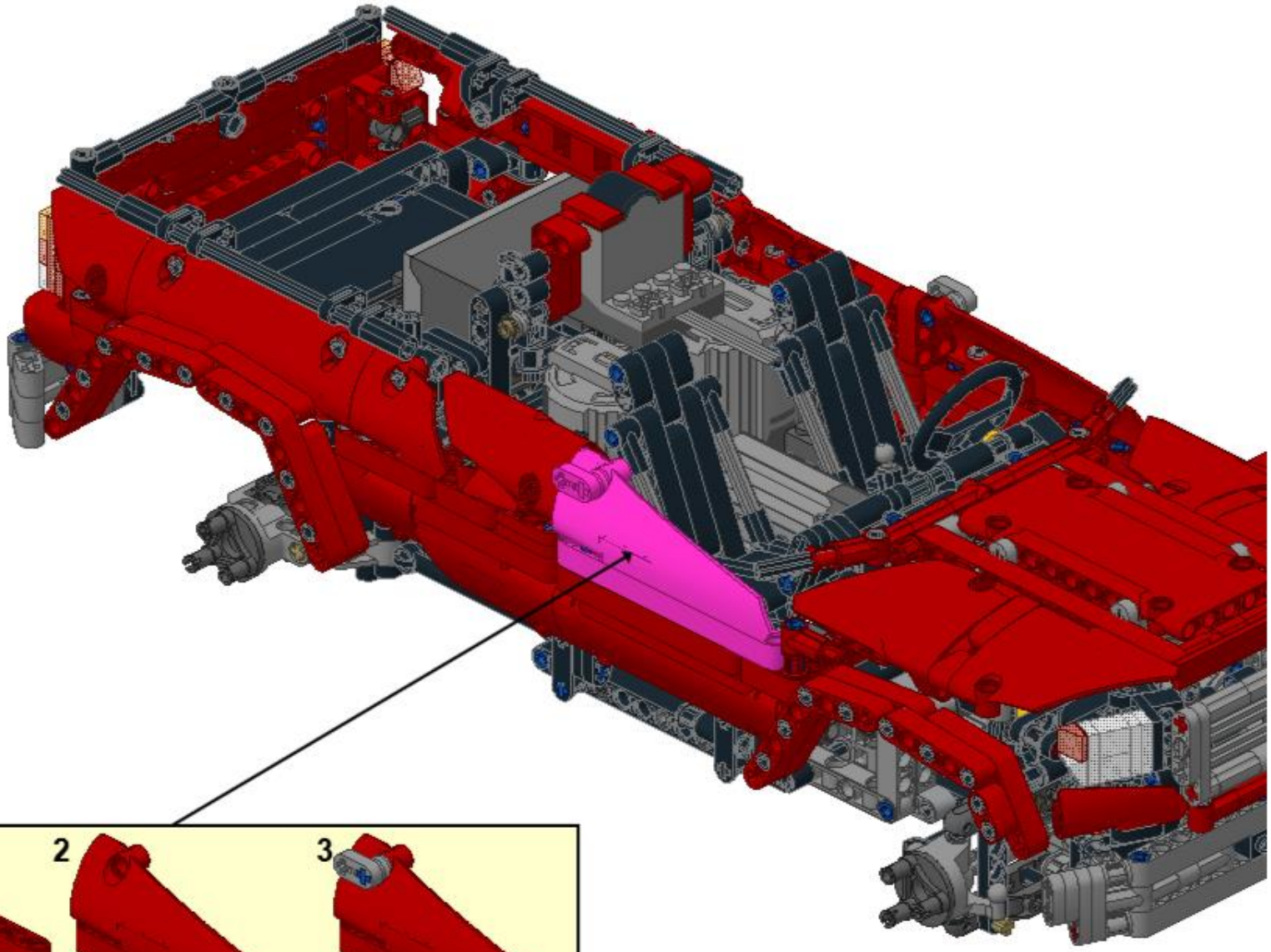

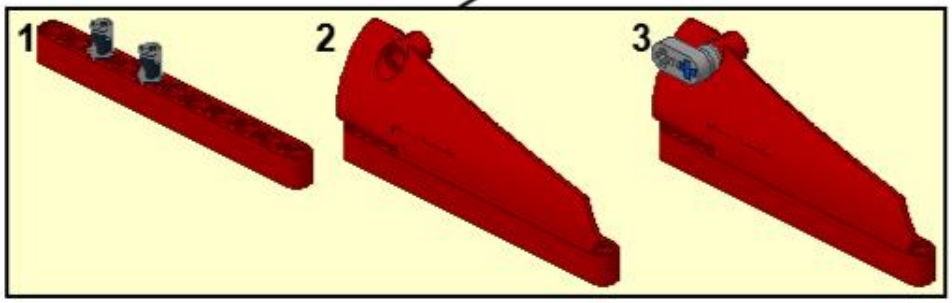

124

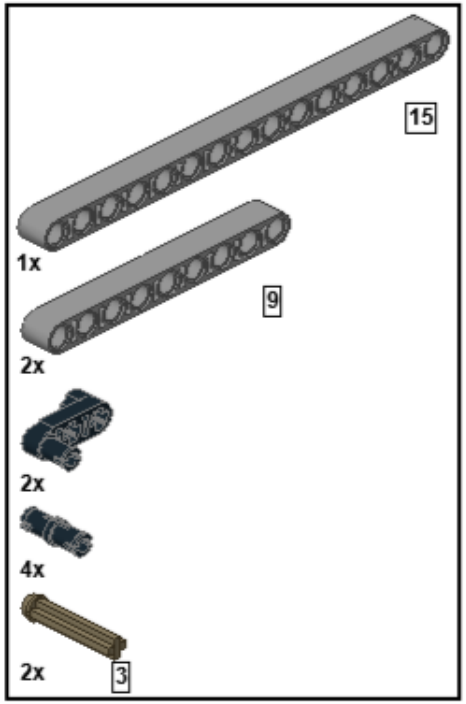

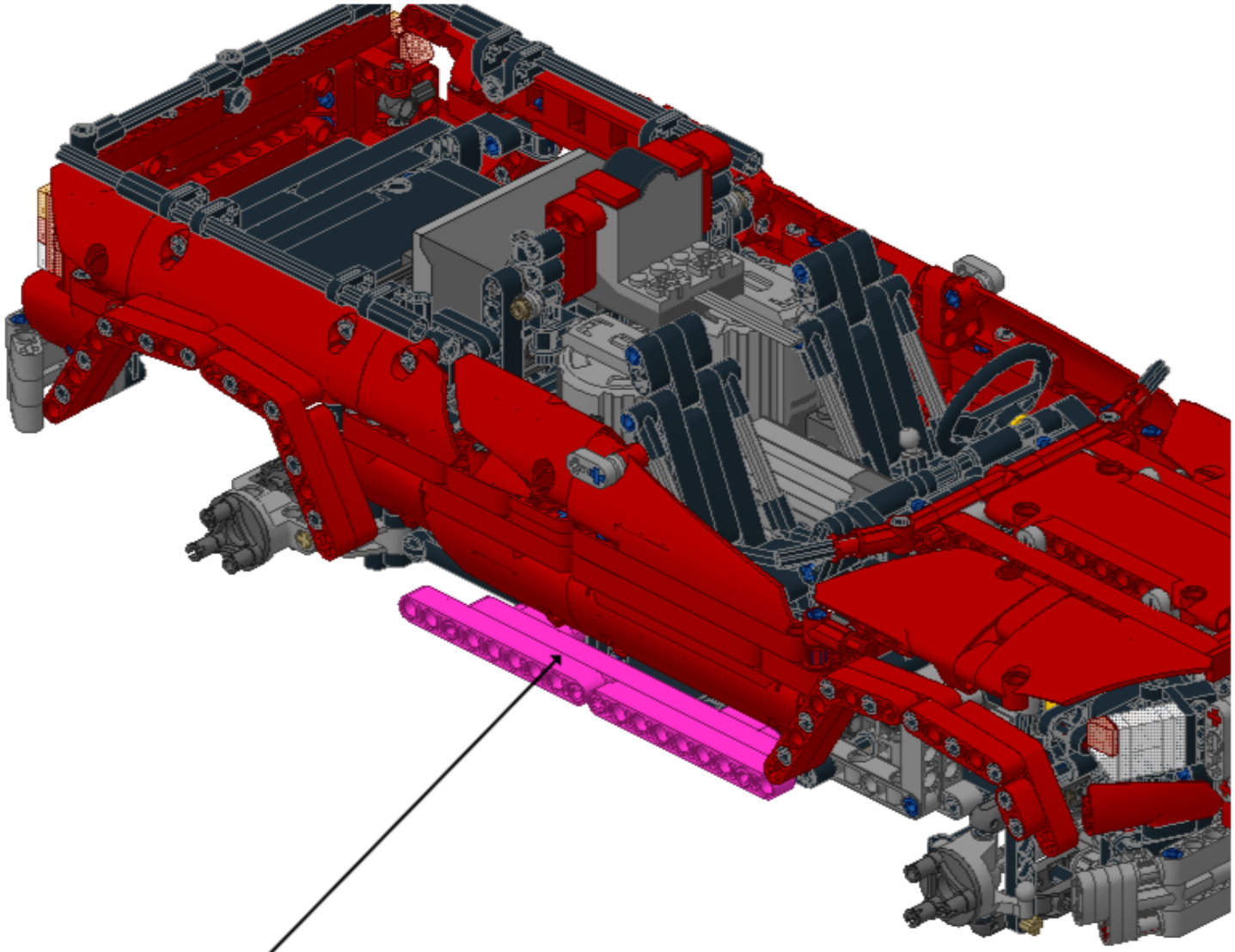

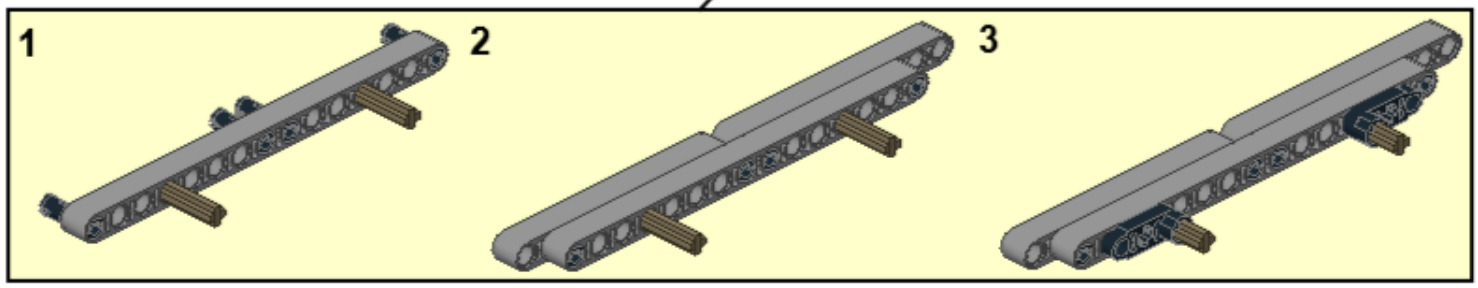

©jokey02

1

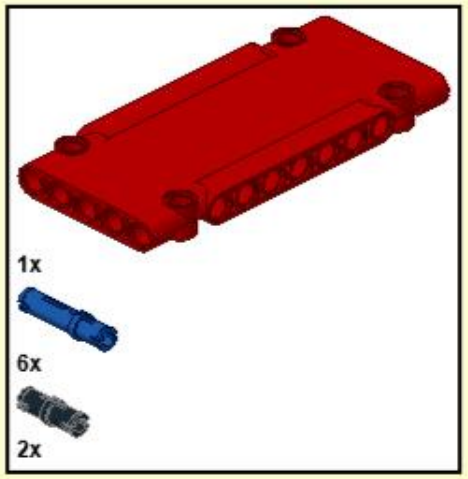

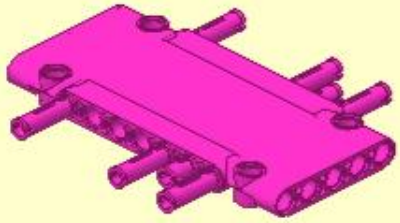

2

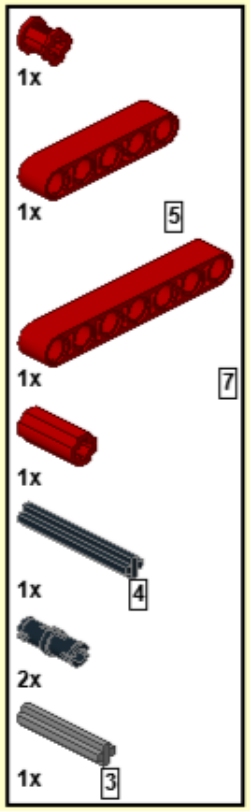

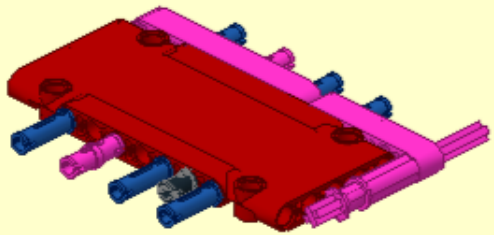

3

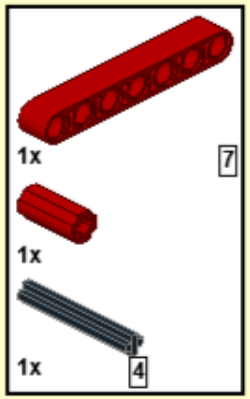

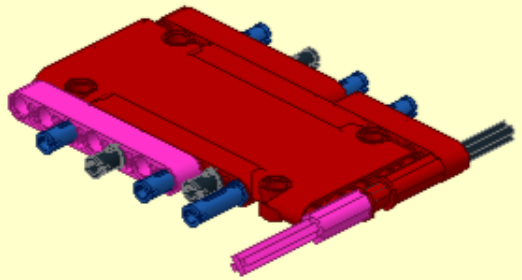

4

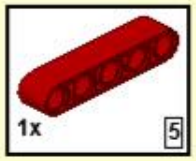

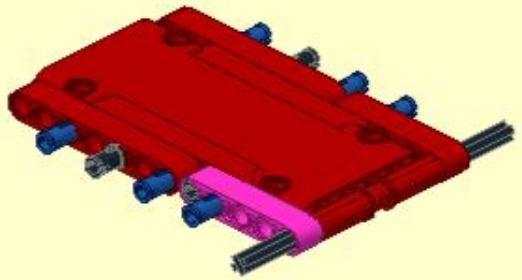

5

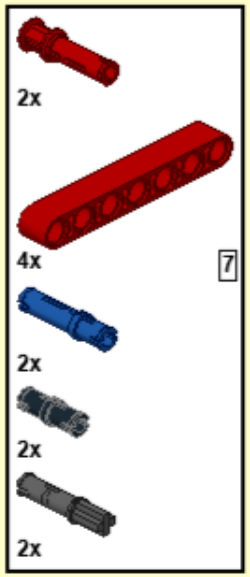

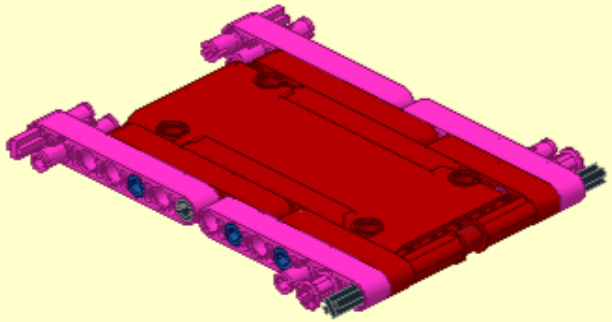

6

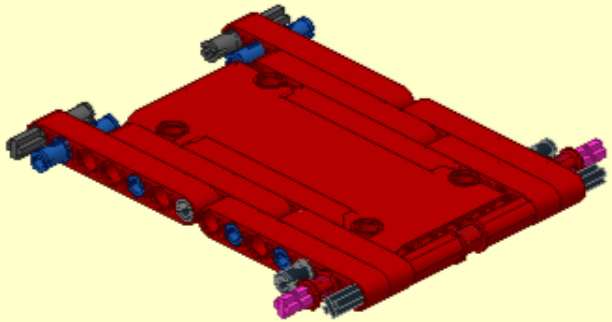

©jokey02

125

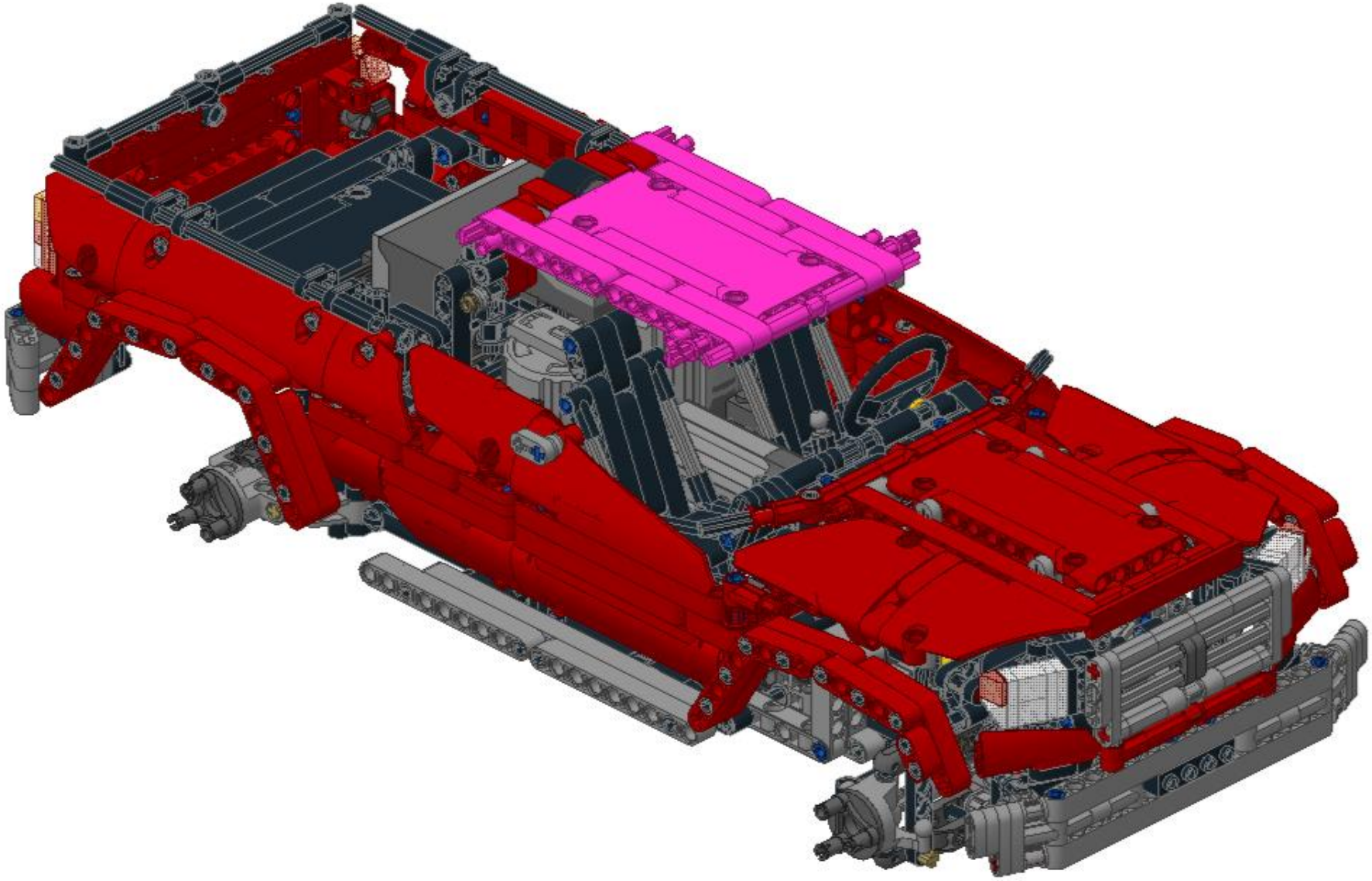

126

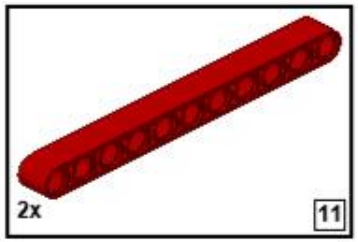

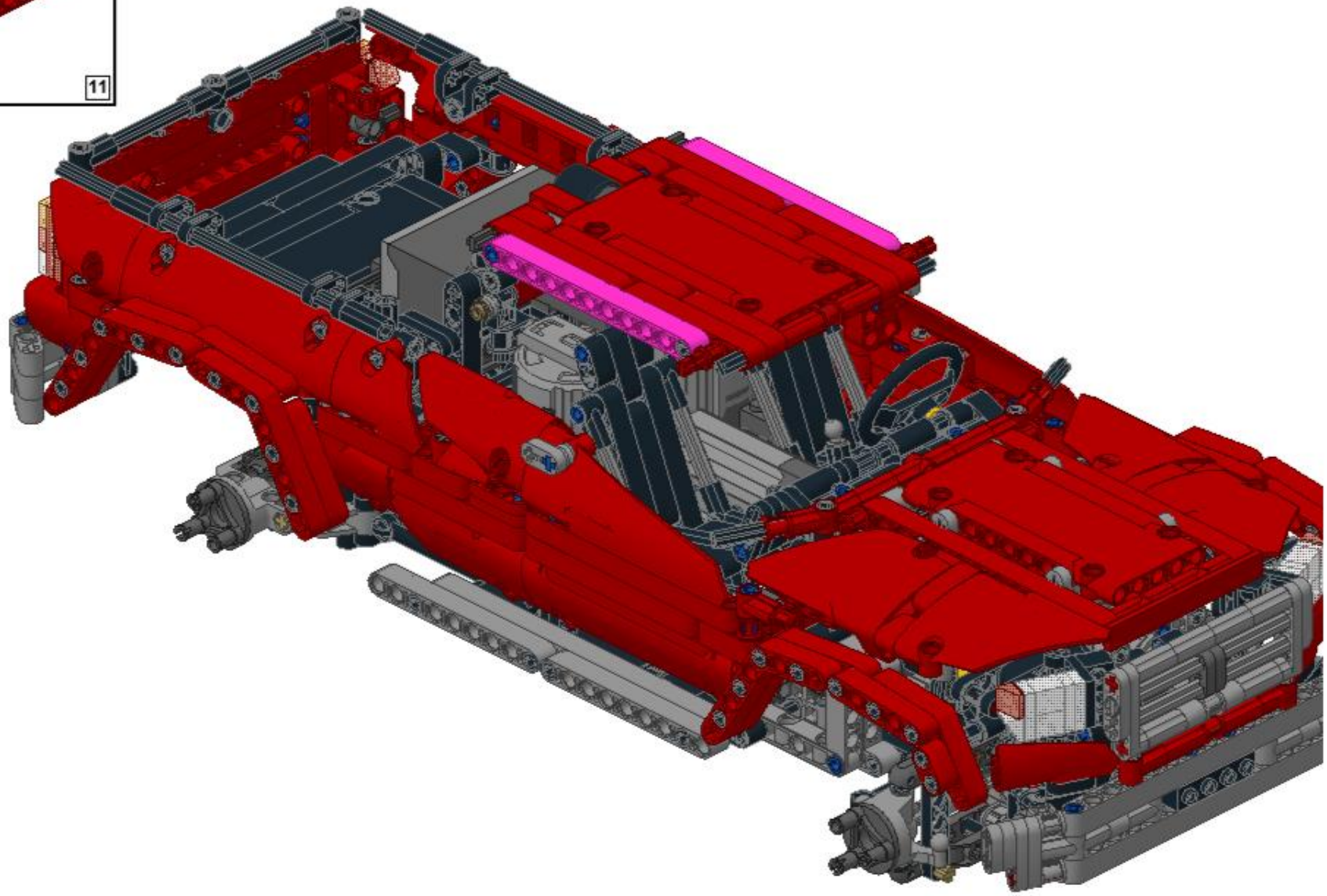

©jokey02

127

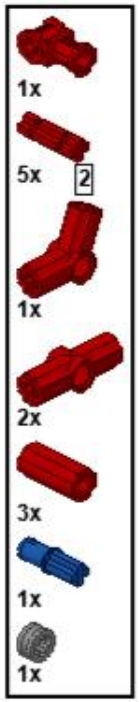

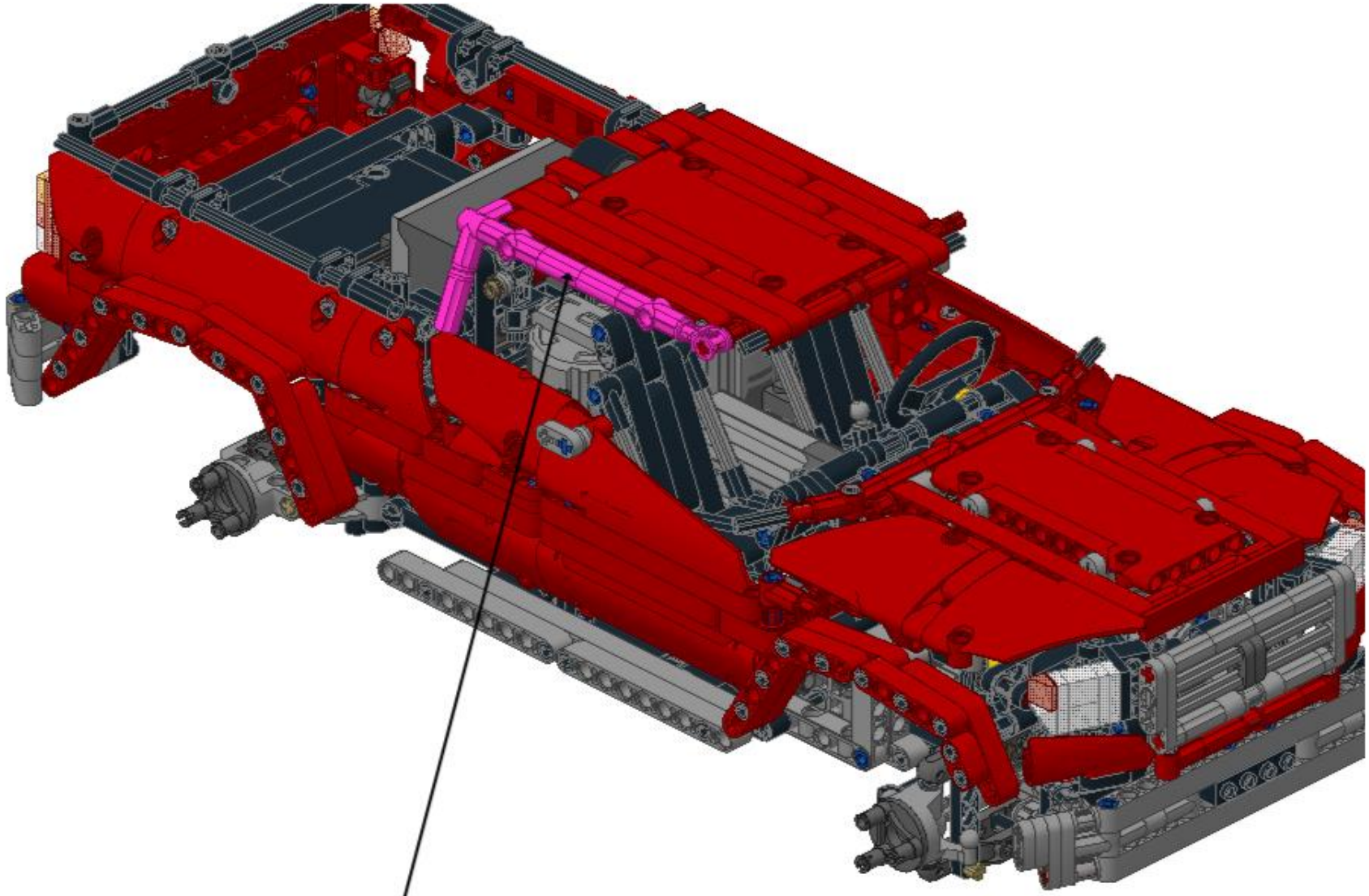

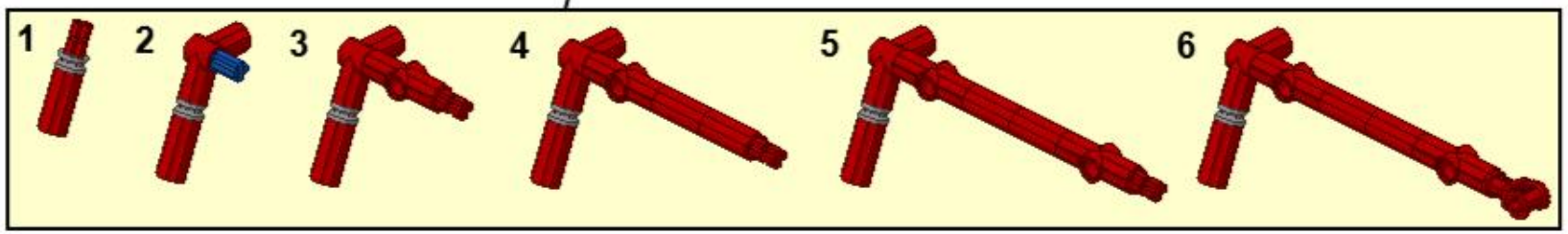

©jokey02

128

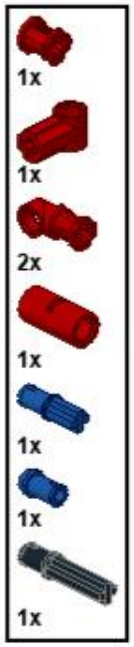

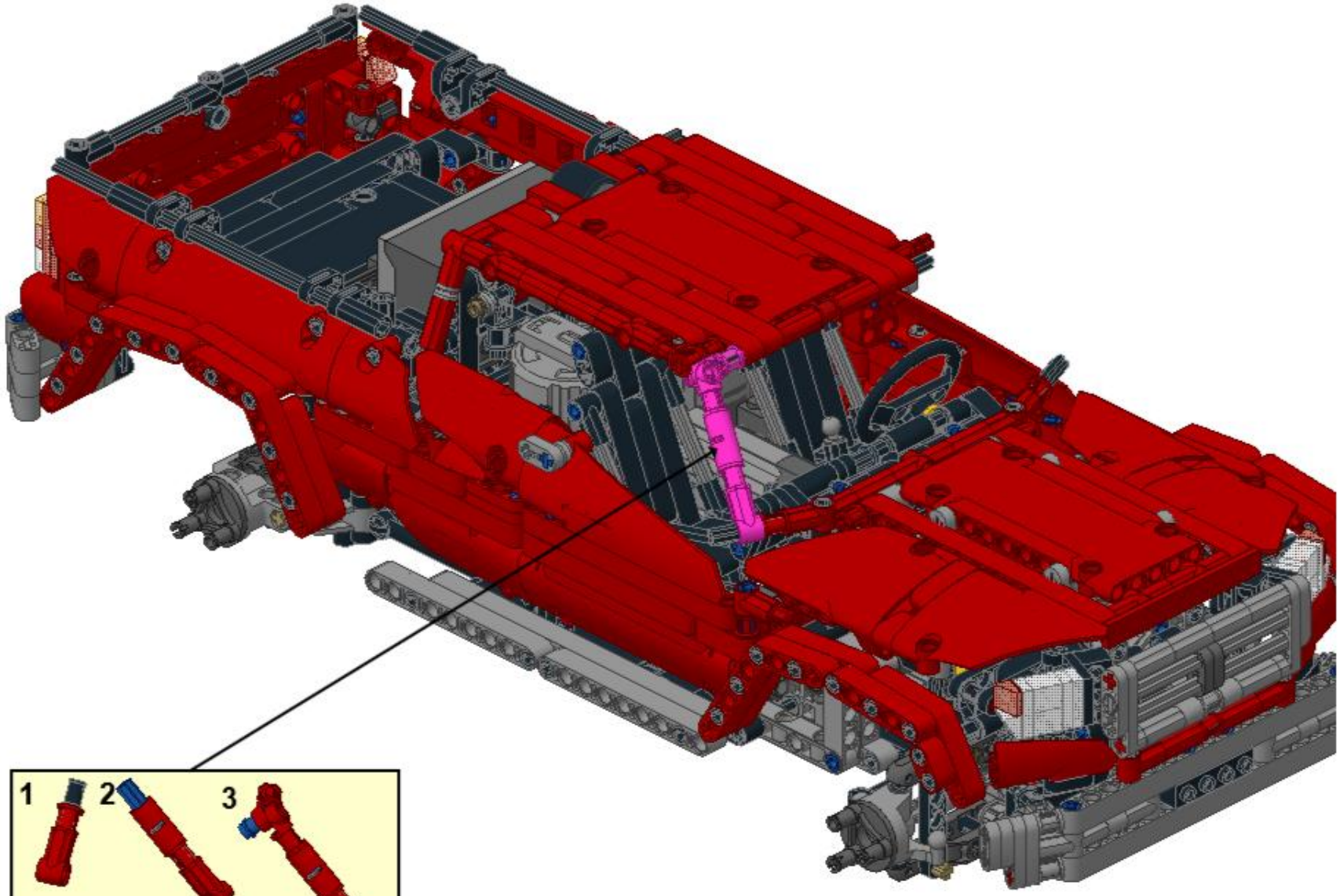

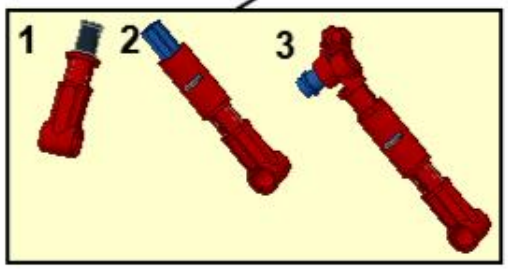

©jokey02

129

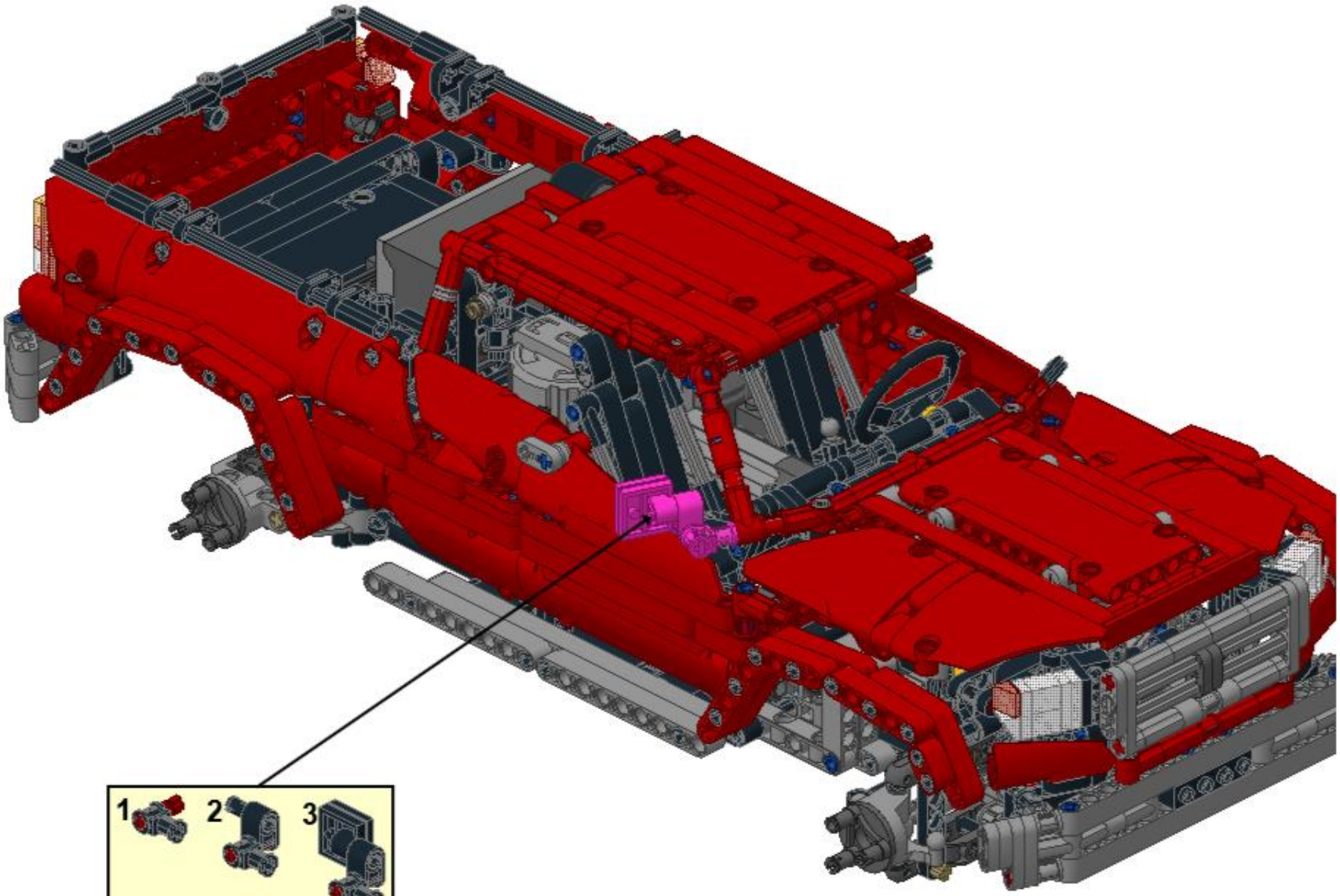

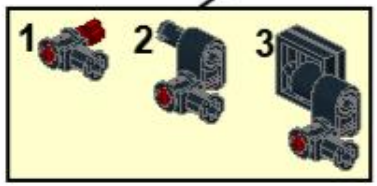

130

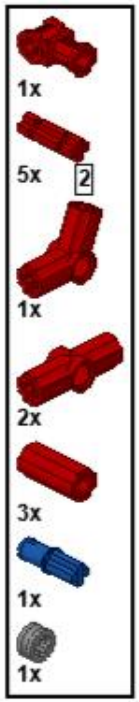

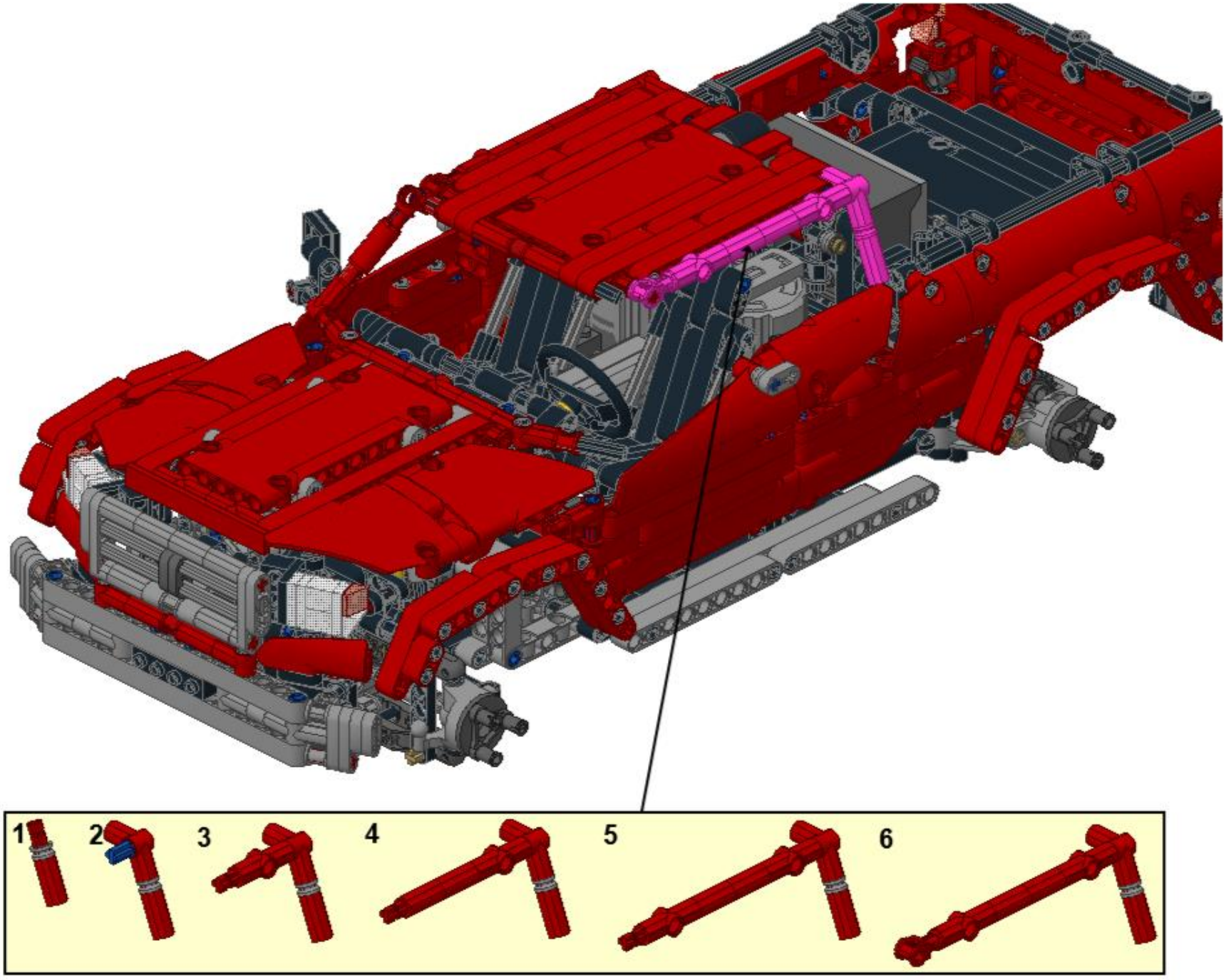

131

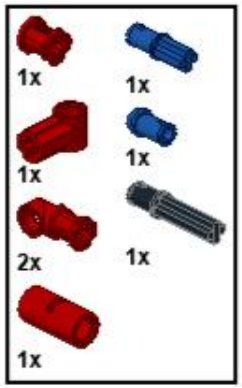

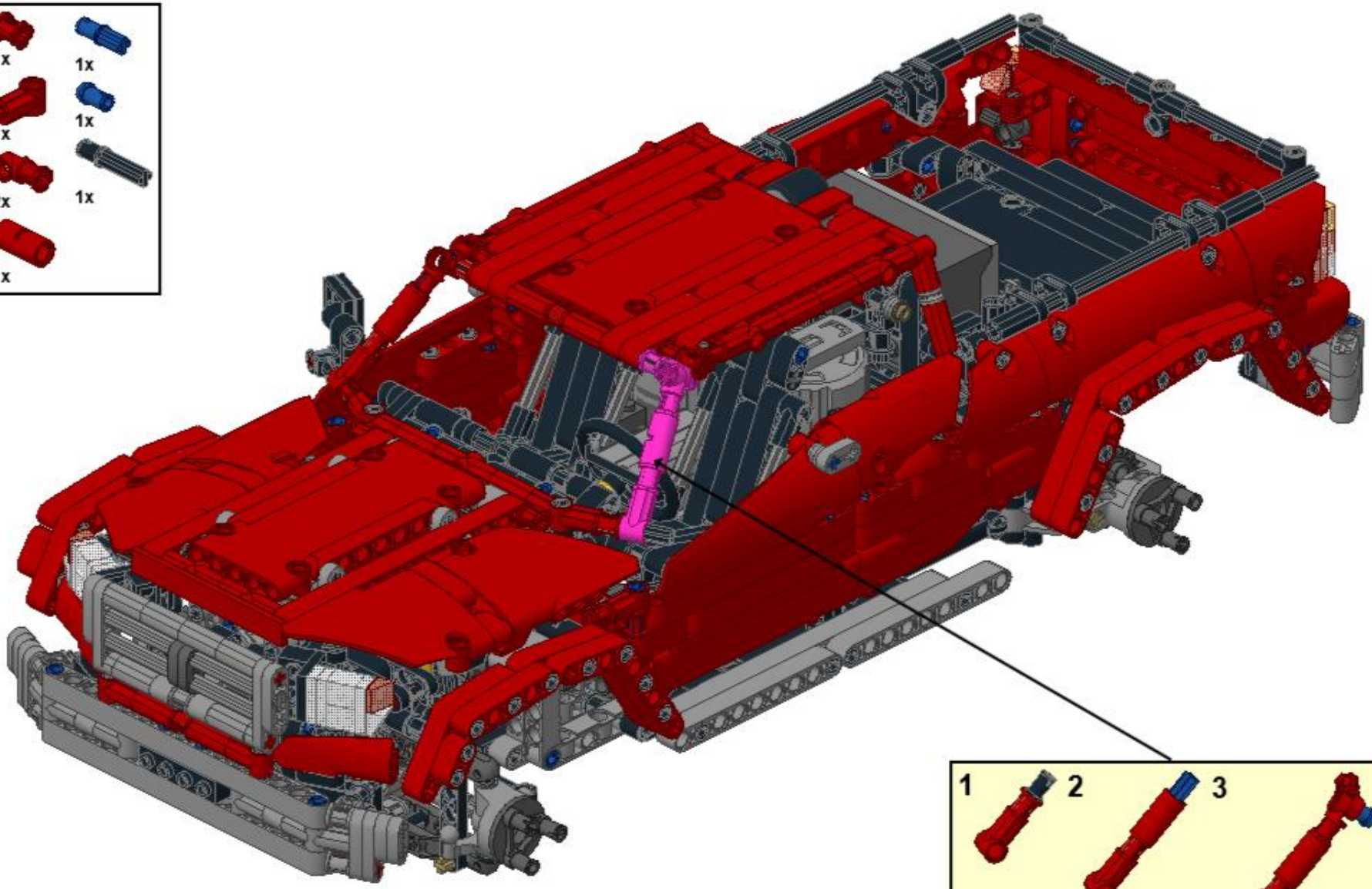

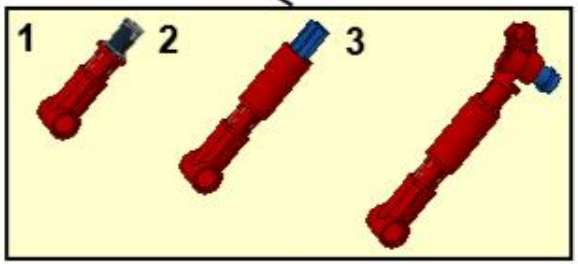

©jokey02

132

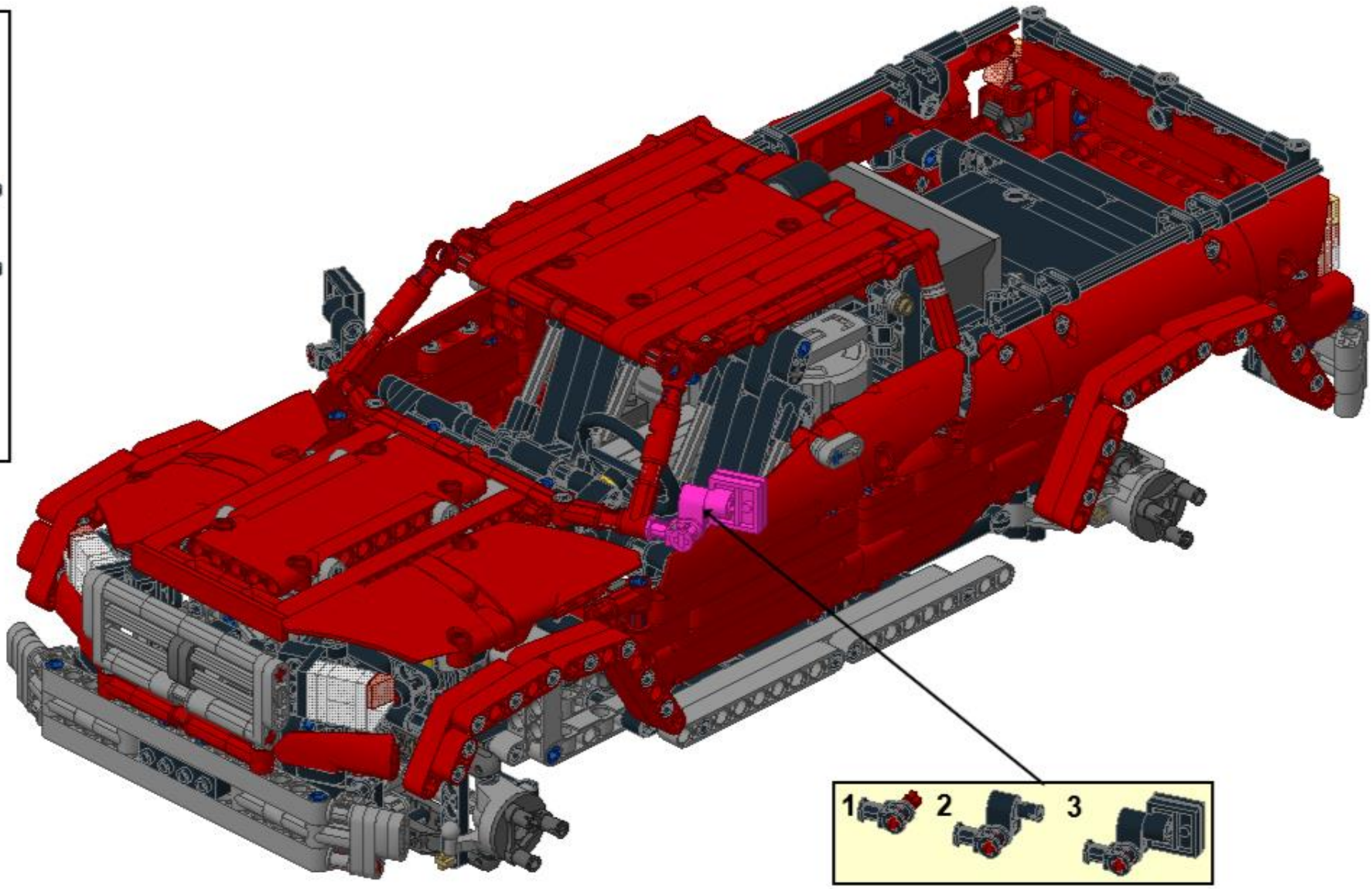

133

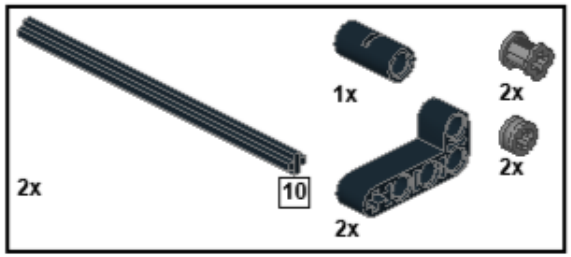

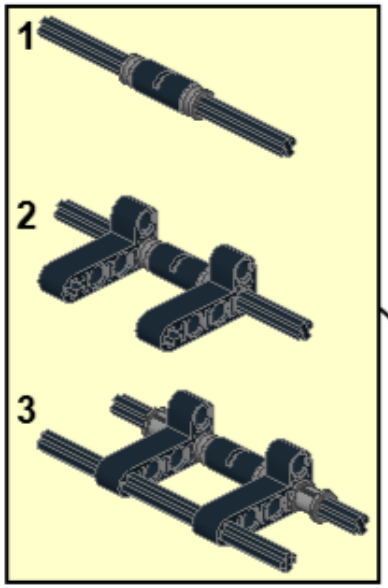

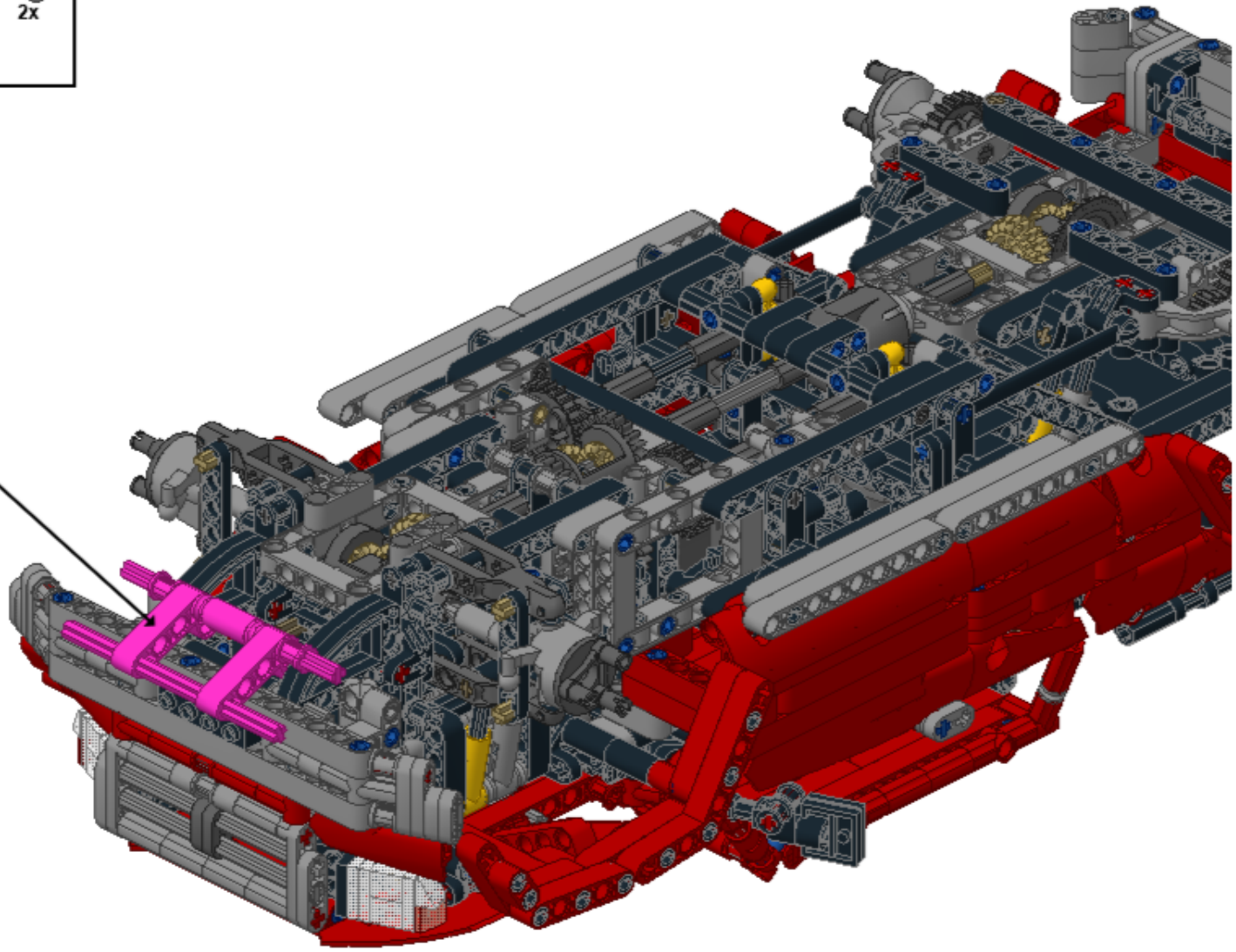

134

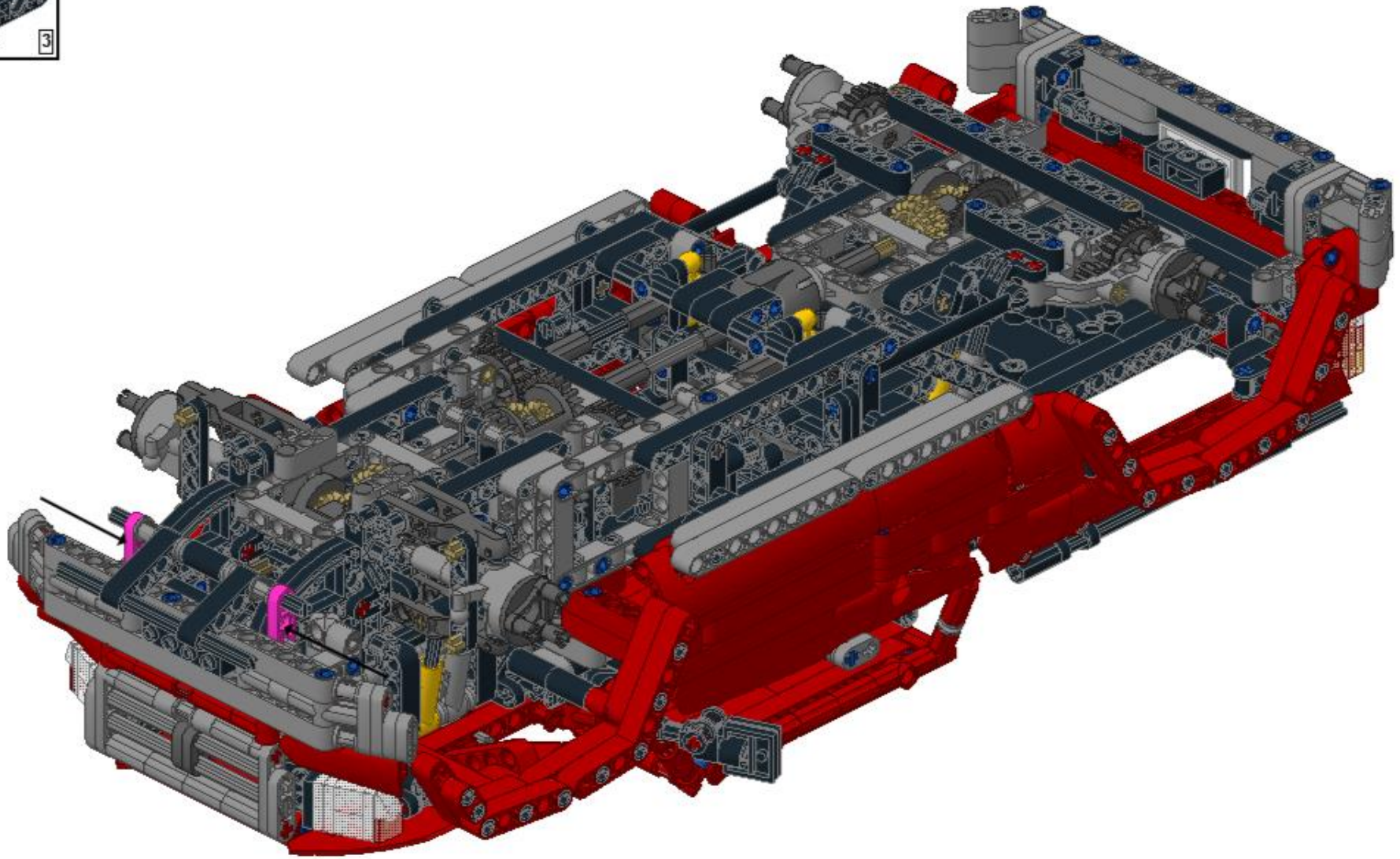

©jokey02

135

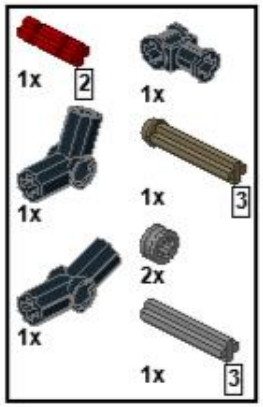

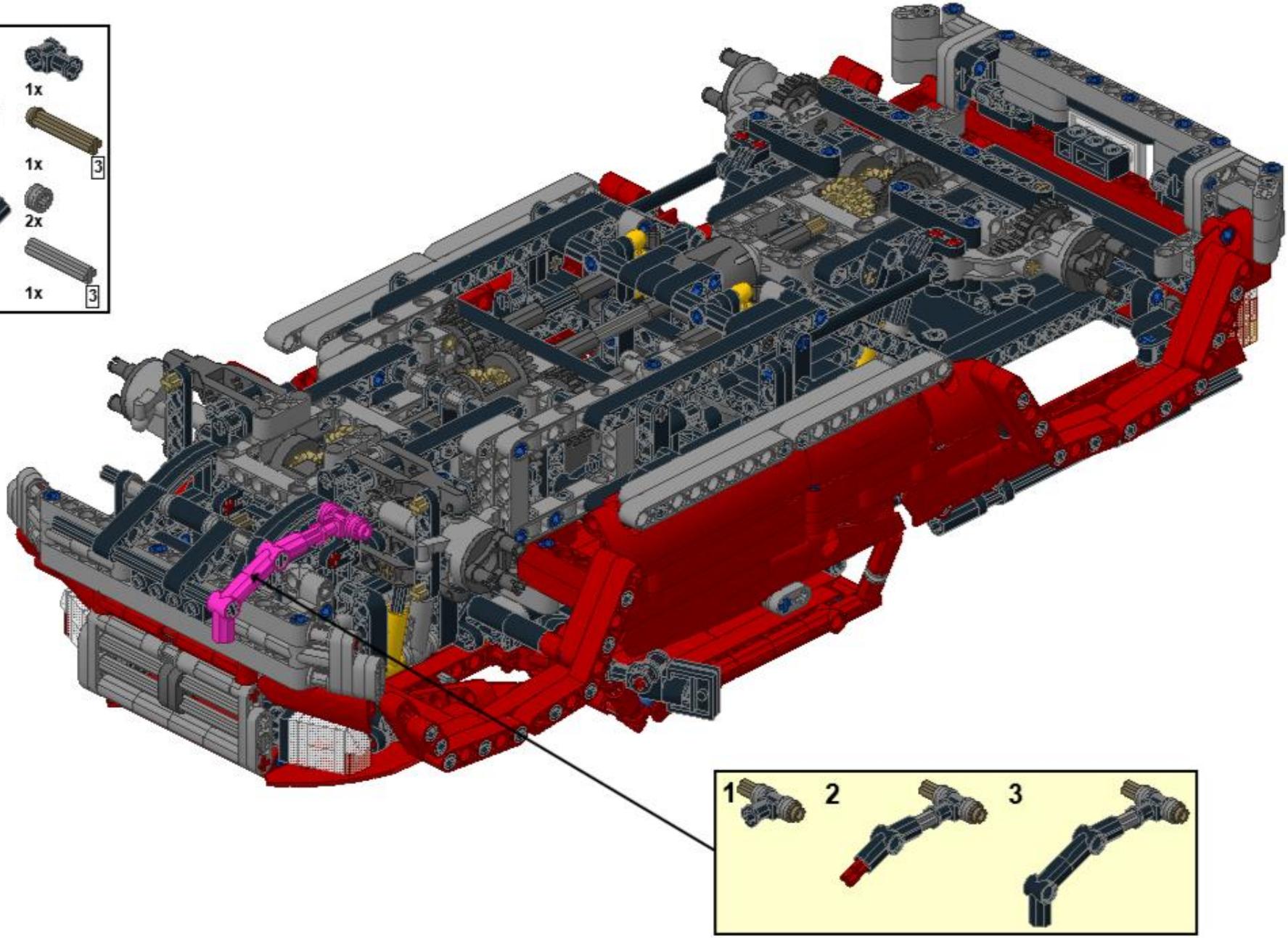

136

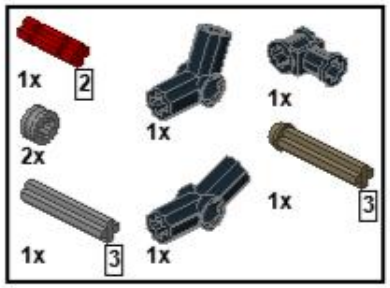

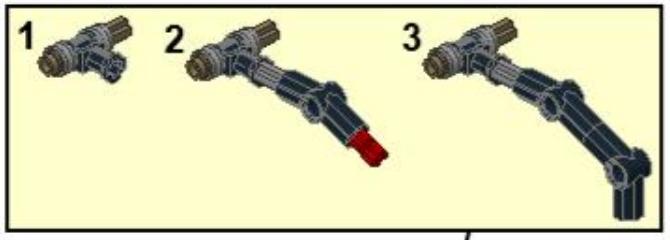

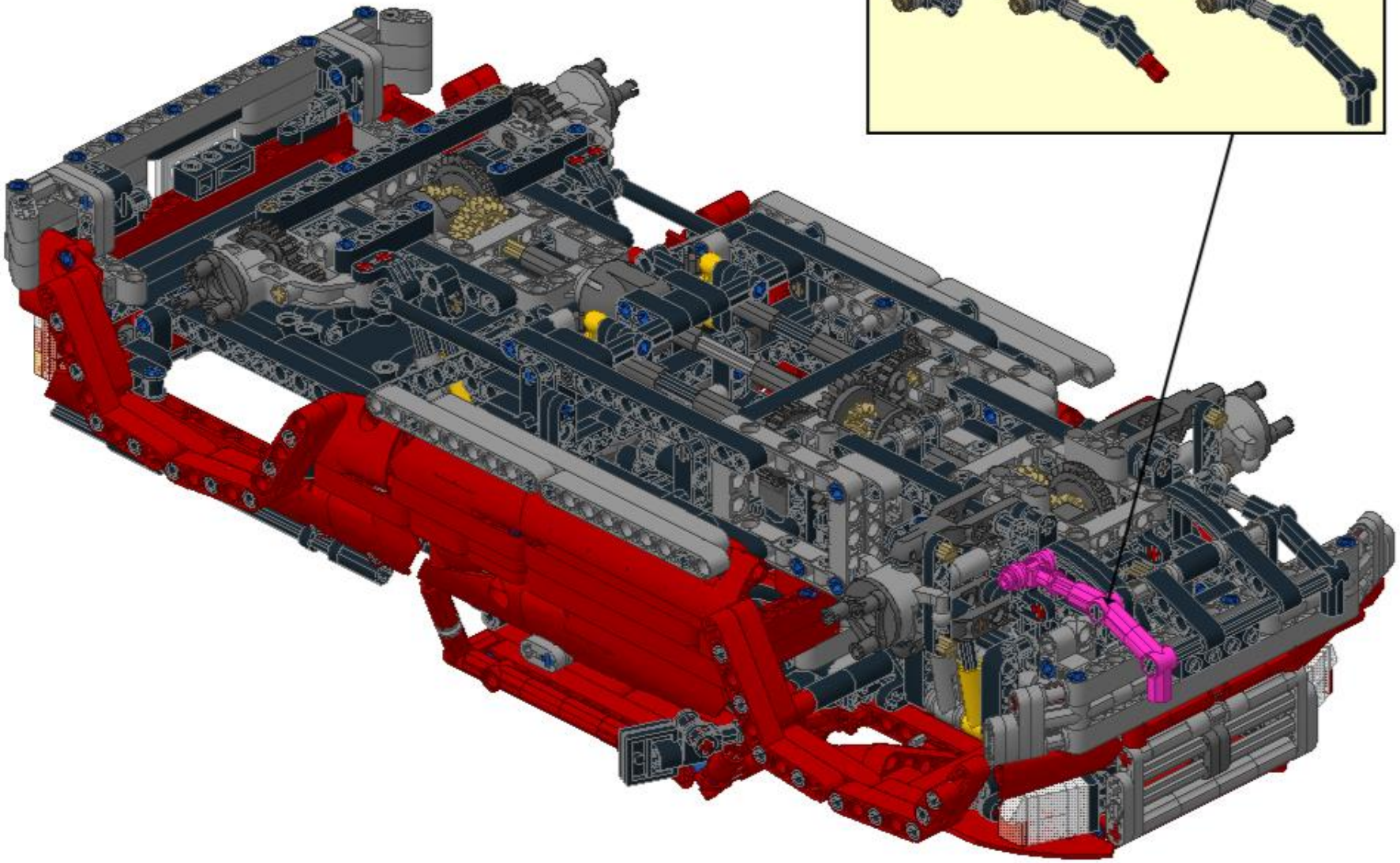

137

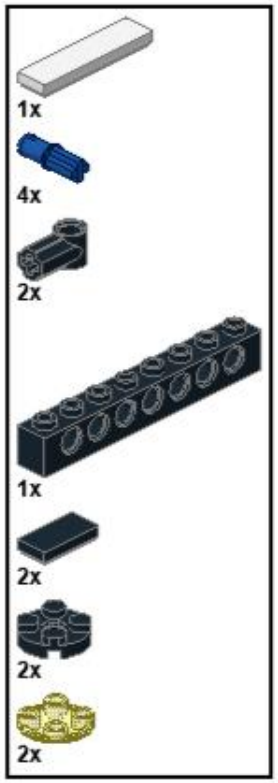

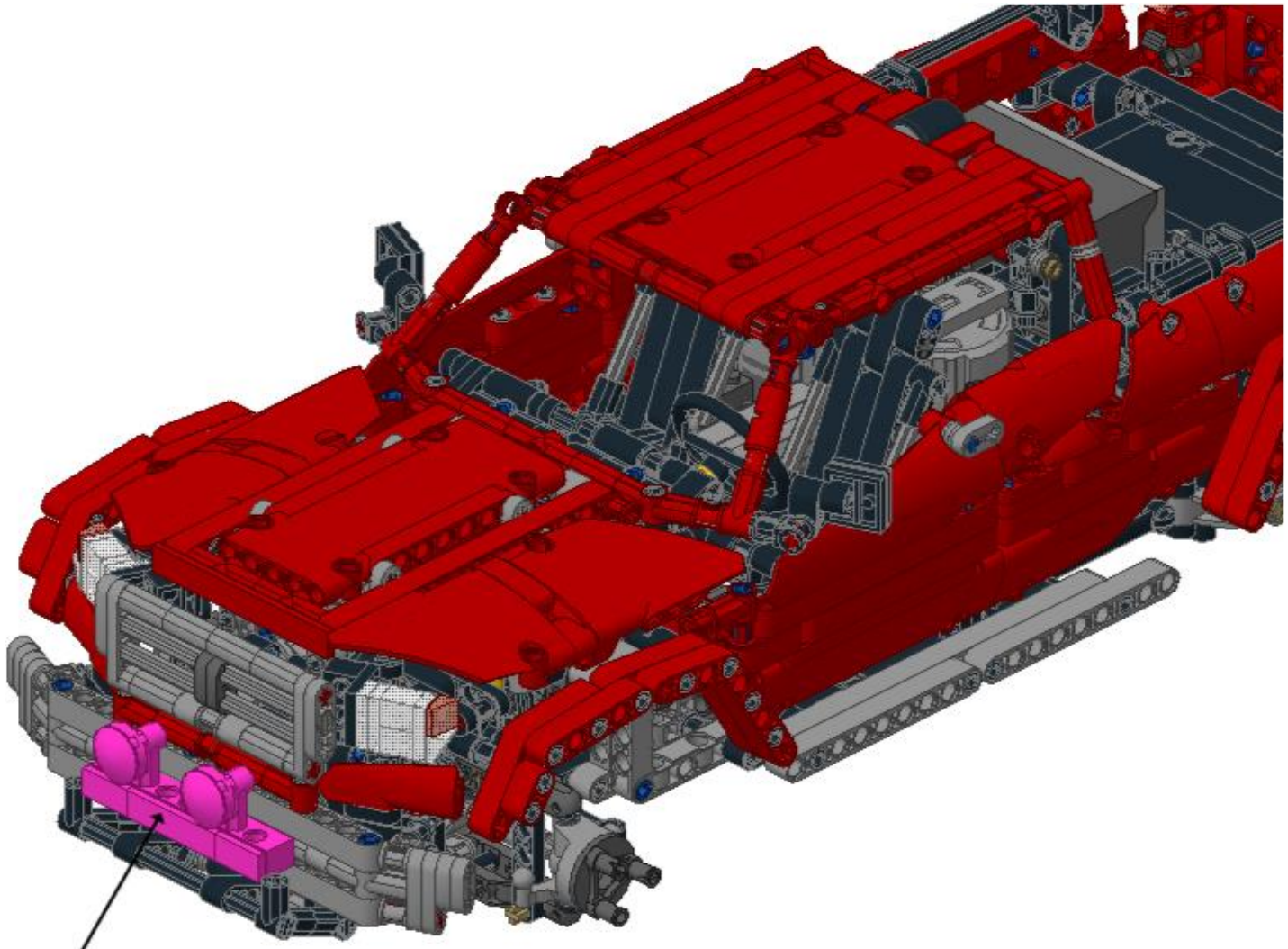

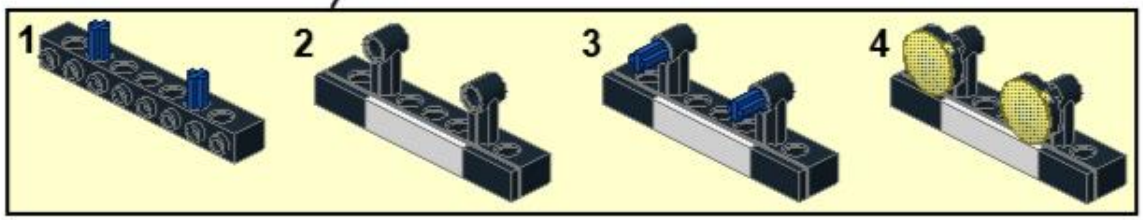

138

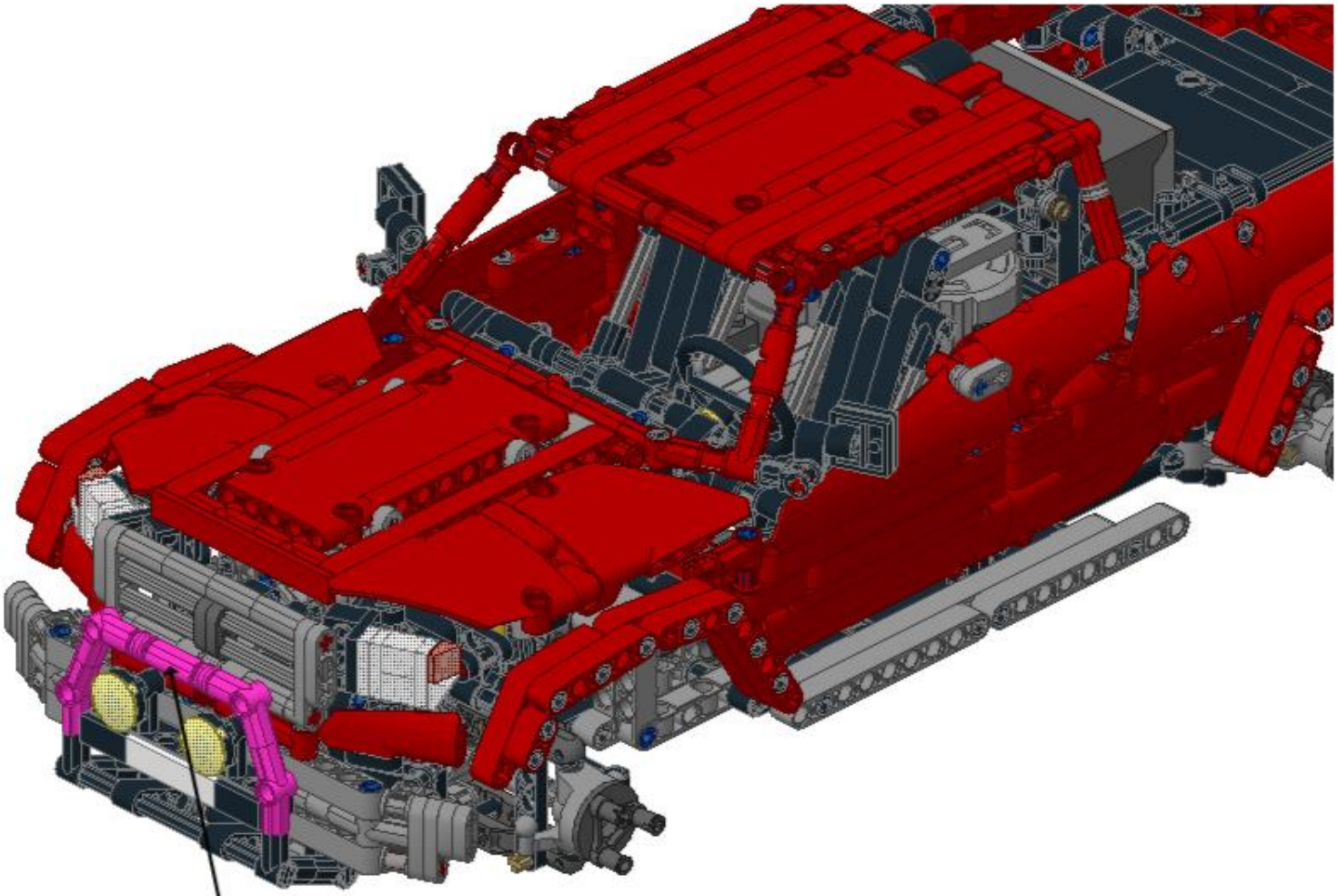

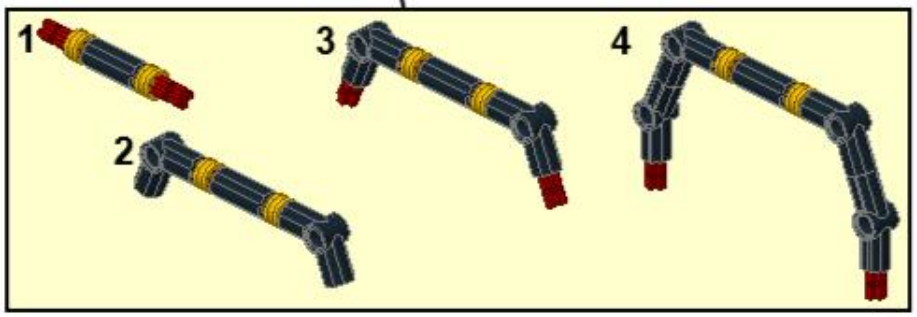

1

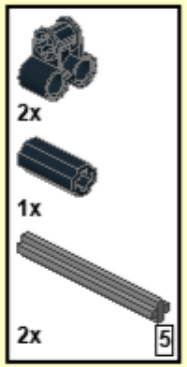

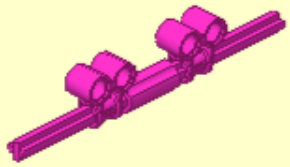

2

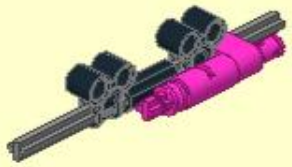

3

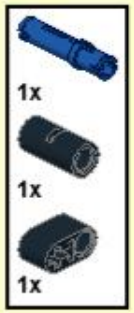

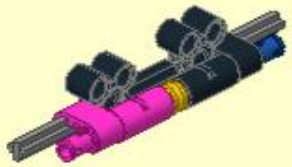

4

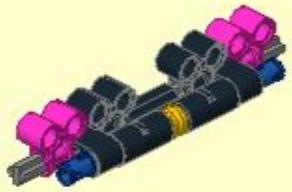

5

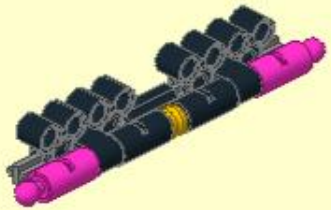

6

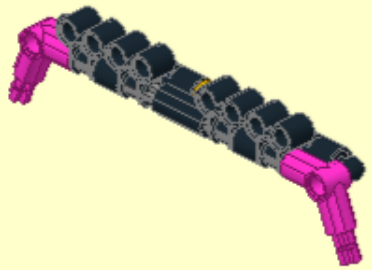

7

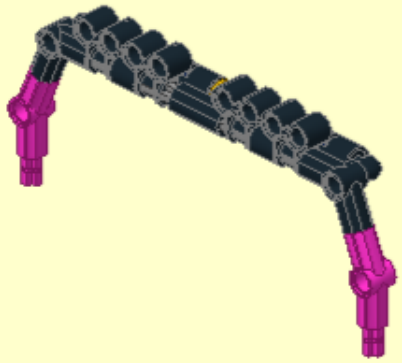

8

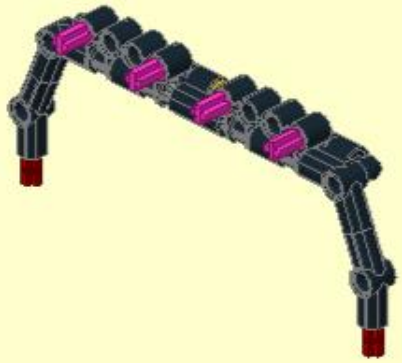

9

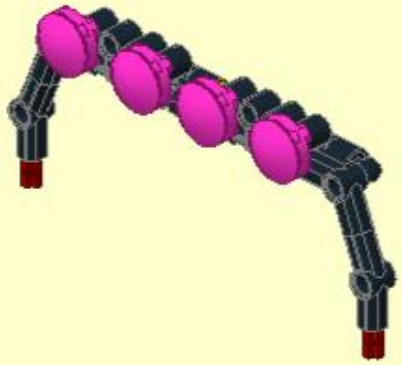

139

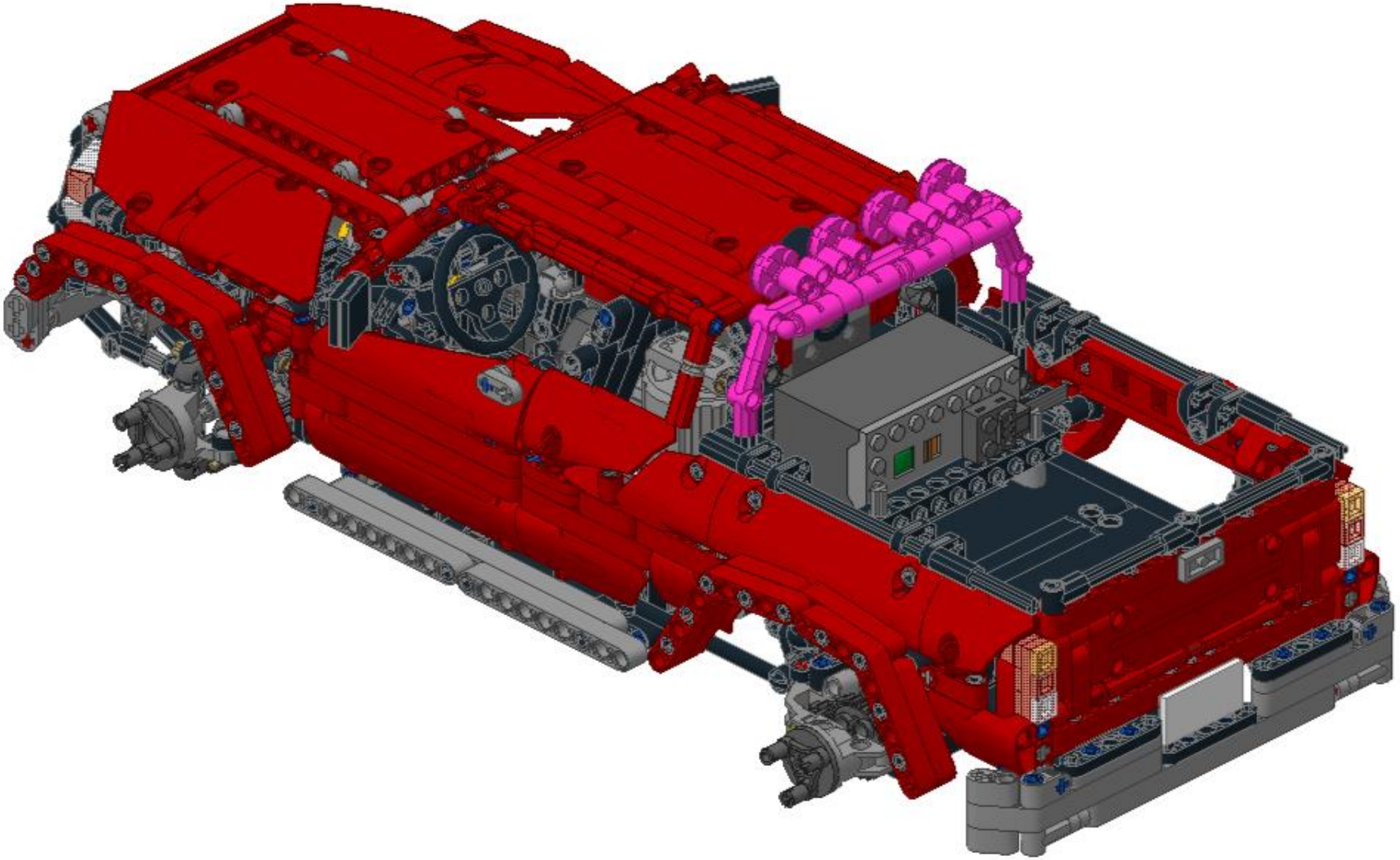

140

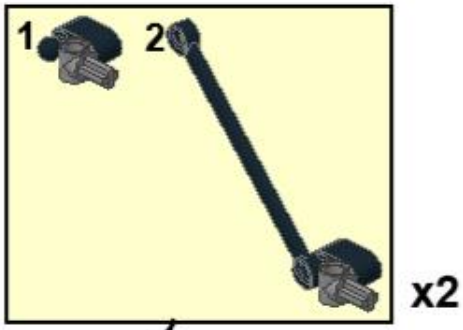

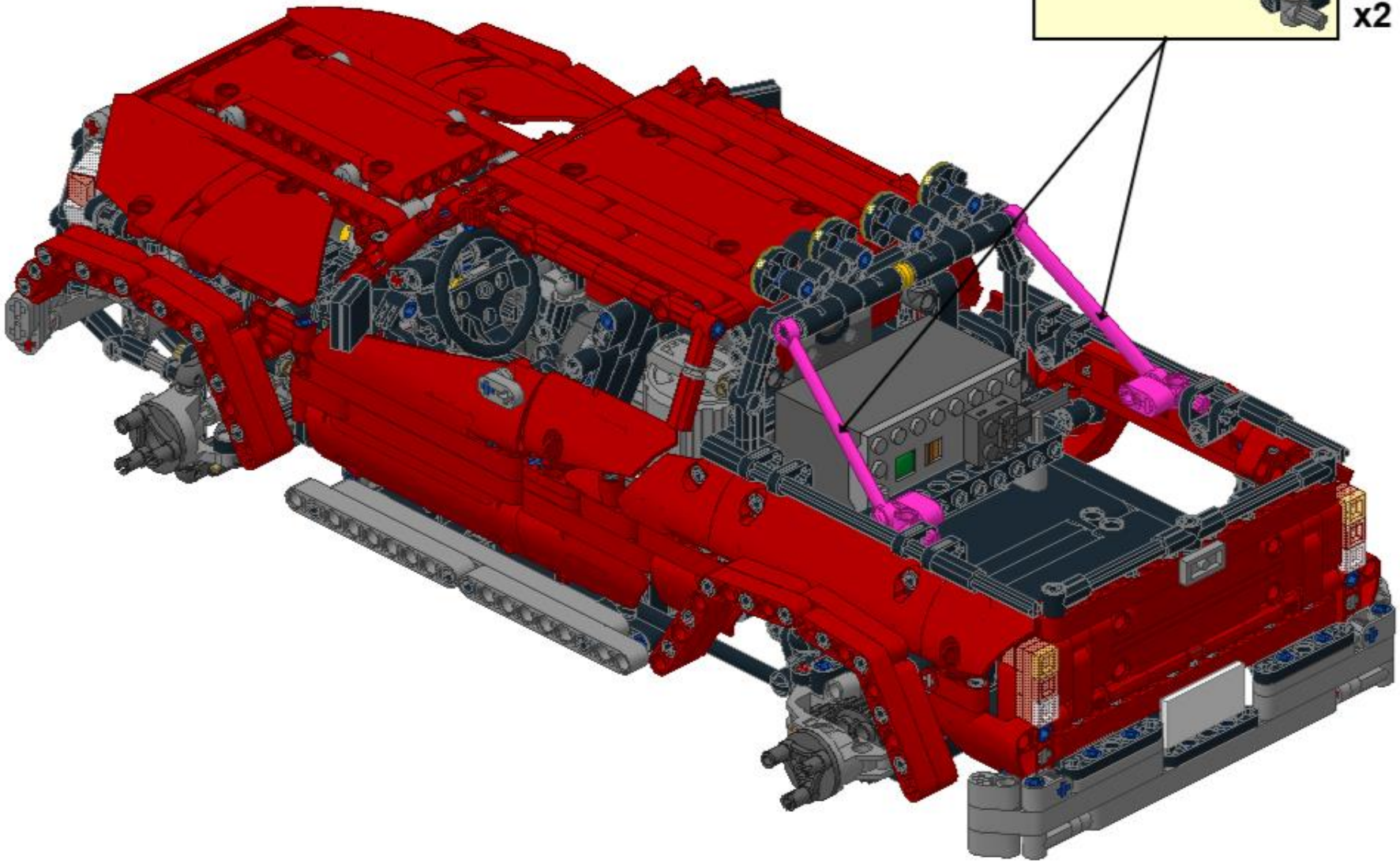

141

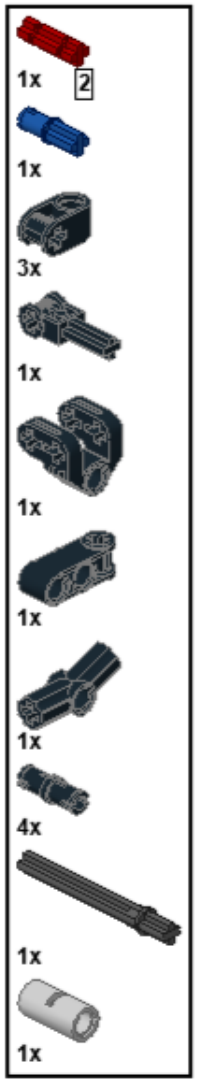

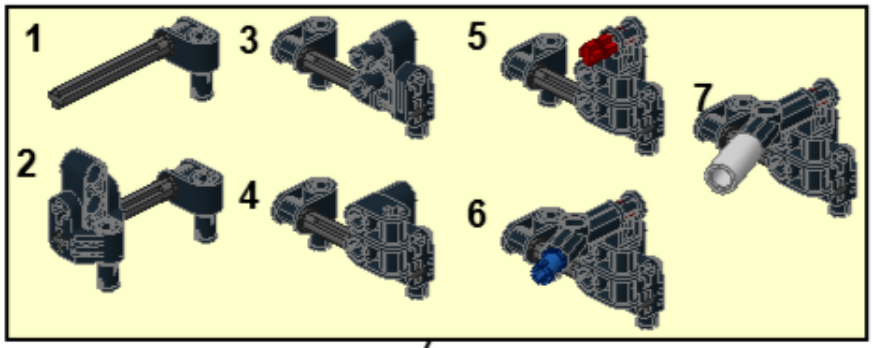

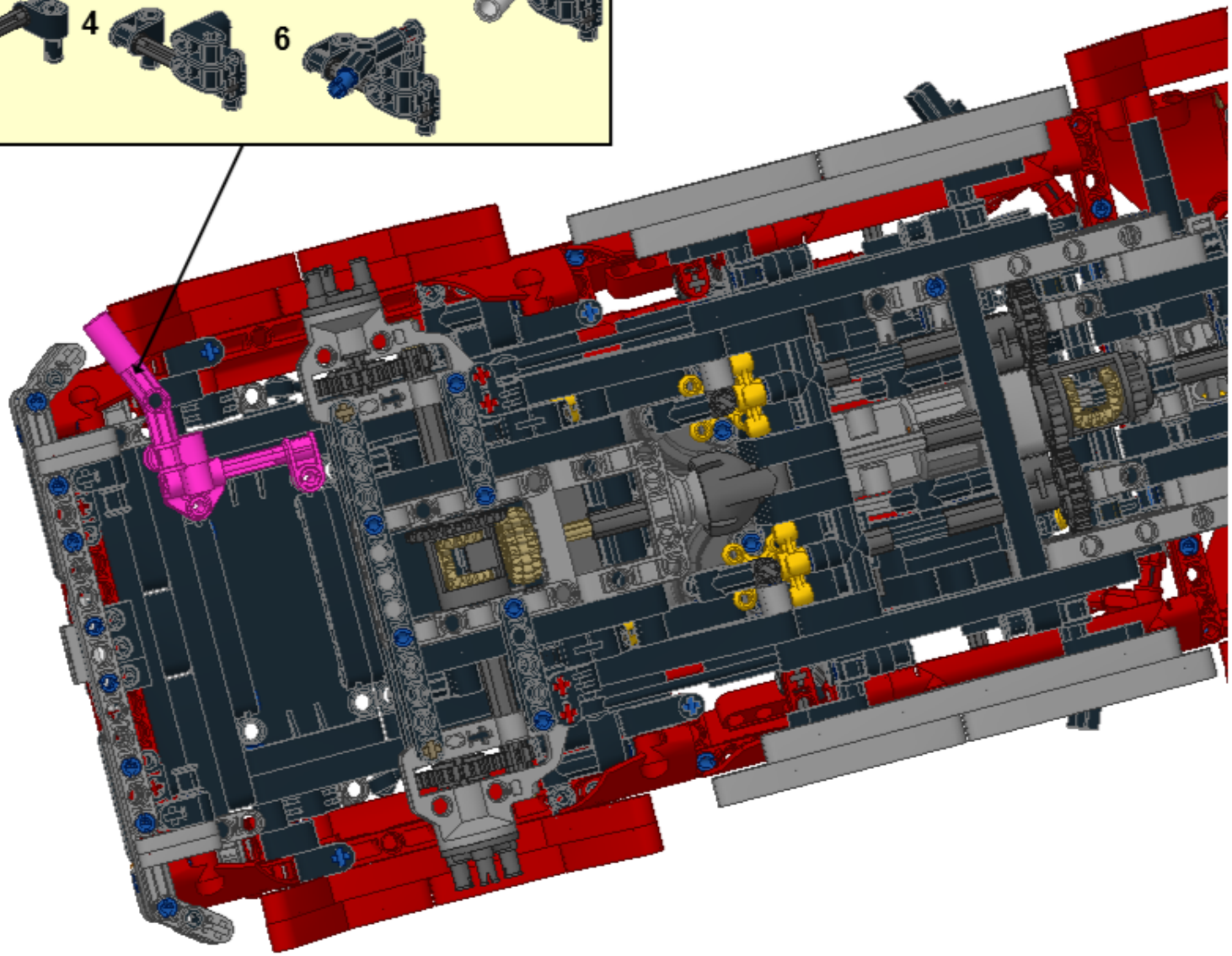

©jokey02

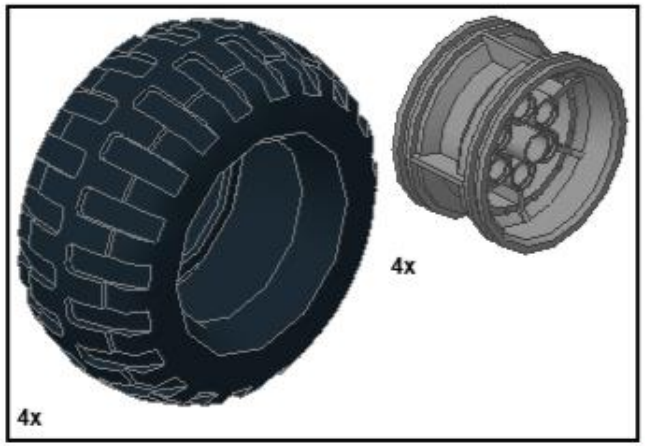

142

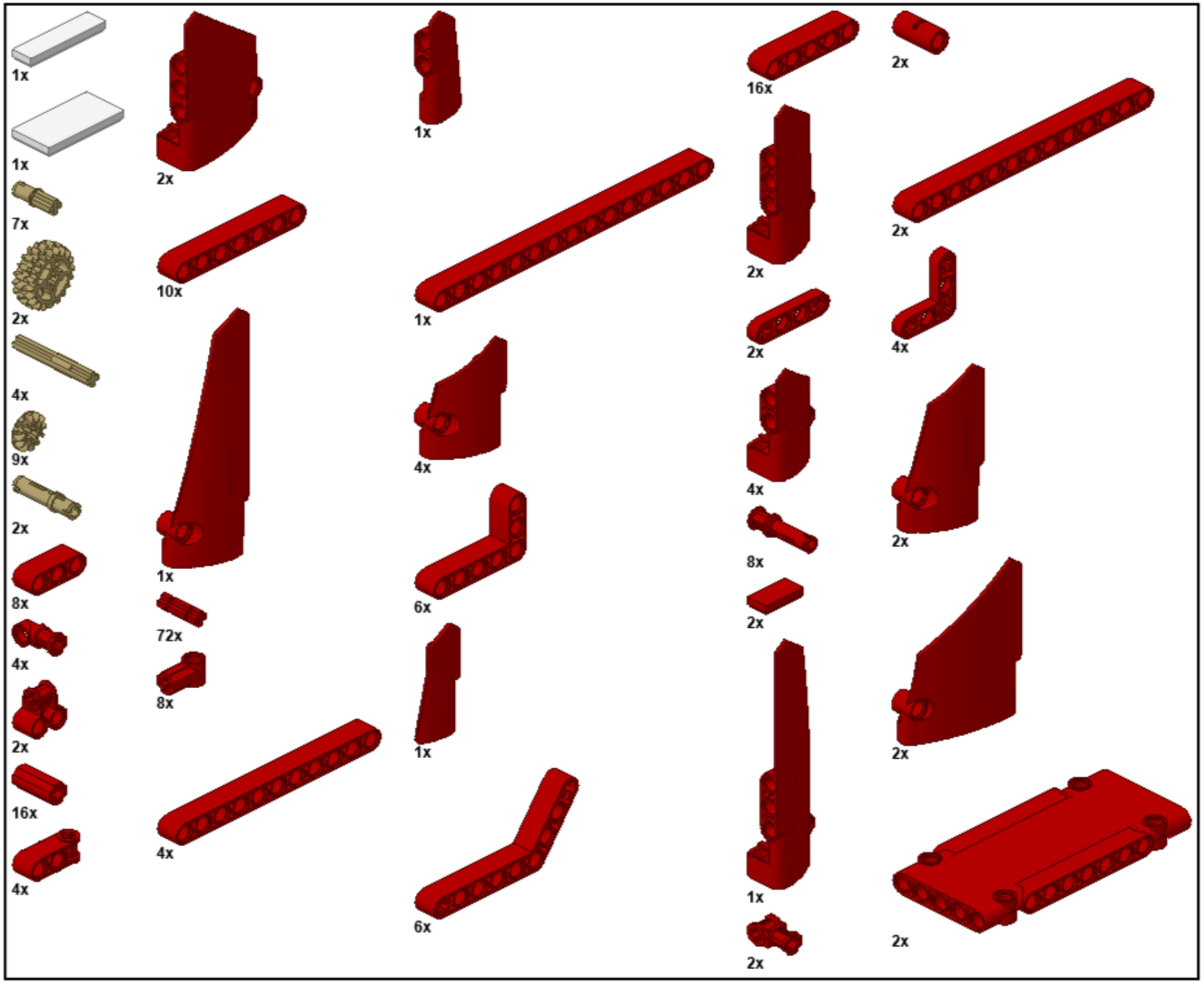
1x
1x
7x
2x
4x
9x
2x
8x
4x
2x
16x
4x
2x
10x
1x
72x
8x
4x
1x
4x
6x
1x
6x
16x
2x
1x
2x
2x
2x
4x
2x
2x
2x
2x

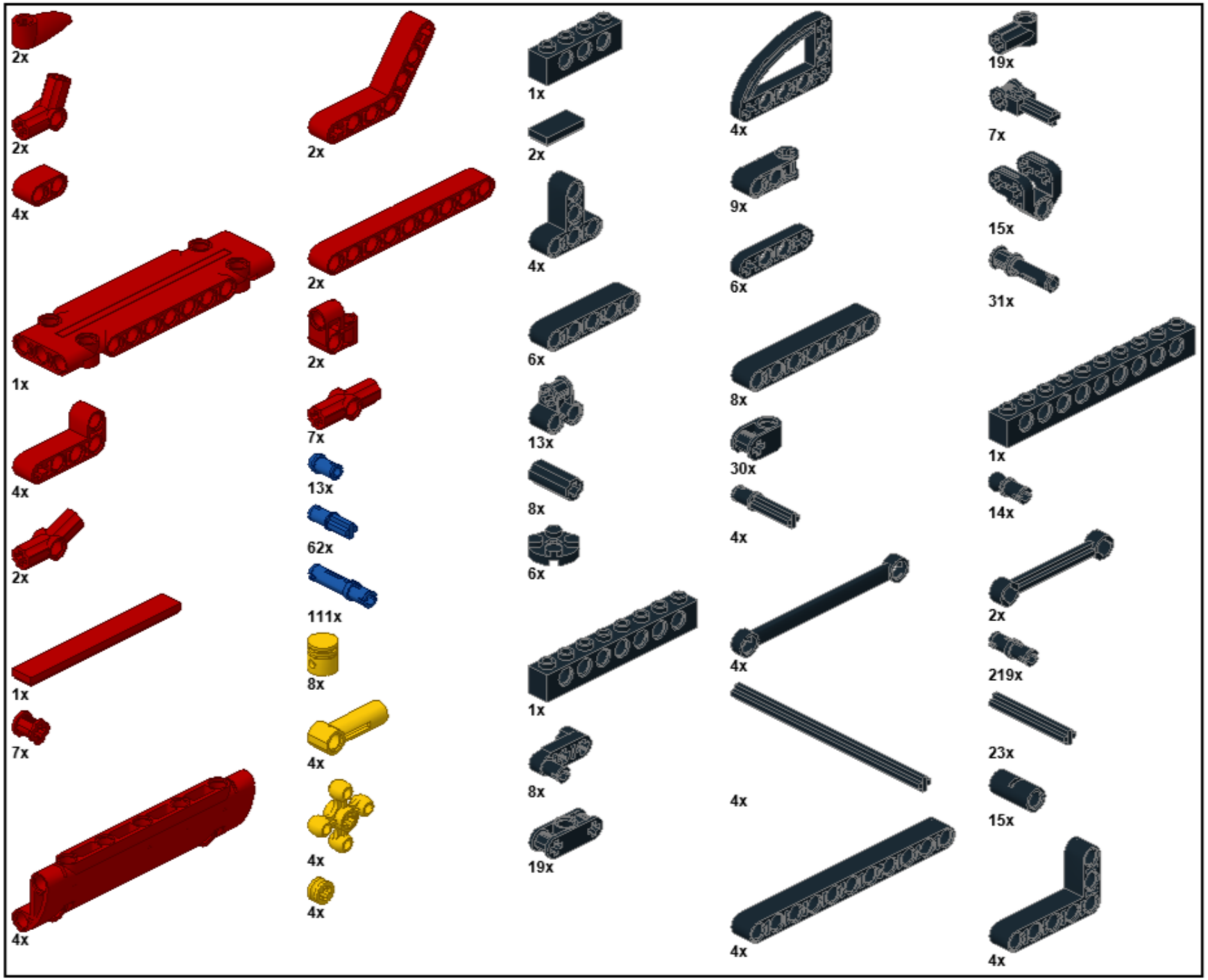
2x
2x
4x
1x
4x
2x
1x
7x
4x
2x
2x
2x
2x
2x
7x
13x
62x
111x
8x
4x
4x
4x
1x
2x
4x
6x
13x
8x
6x
1x
8x
19x
4x
9x
6x
8x
30x
4x
4x
4x
4x
19x
7x
15x
31x
1x
14x
2x
219x
23x
15x
4x

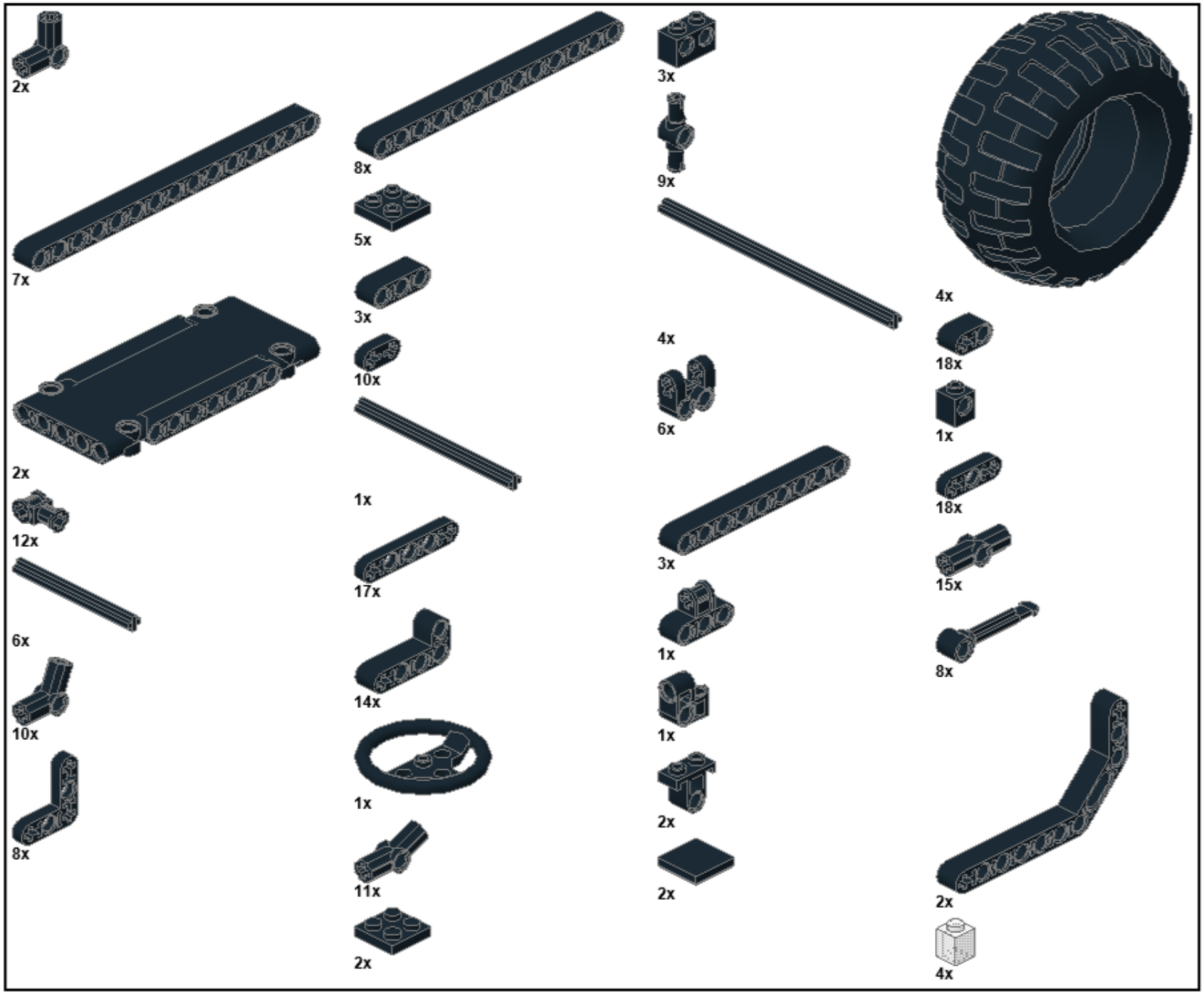
2x
7x
2x
12x
6x
10x
8x
8x
5x
3x
10x
1x
17x
14x
1x
11x
2x
3x
9x
4x
6x
3x
1x
1x
2x
2x
4x
18x
1x
18x
15x
8x
2x
4x

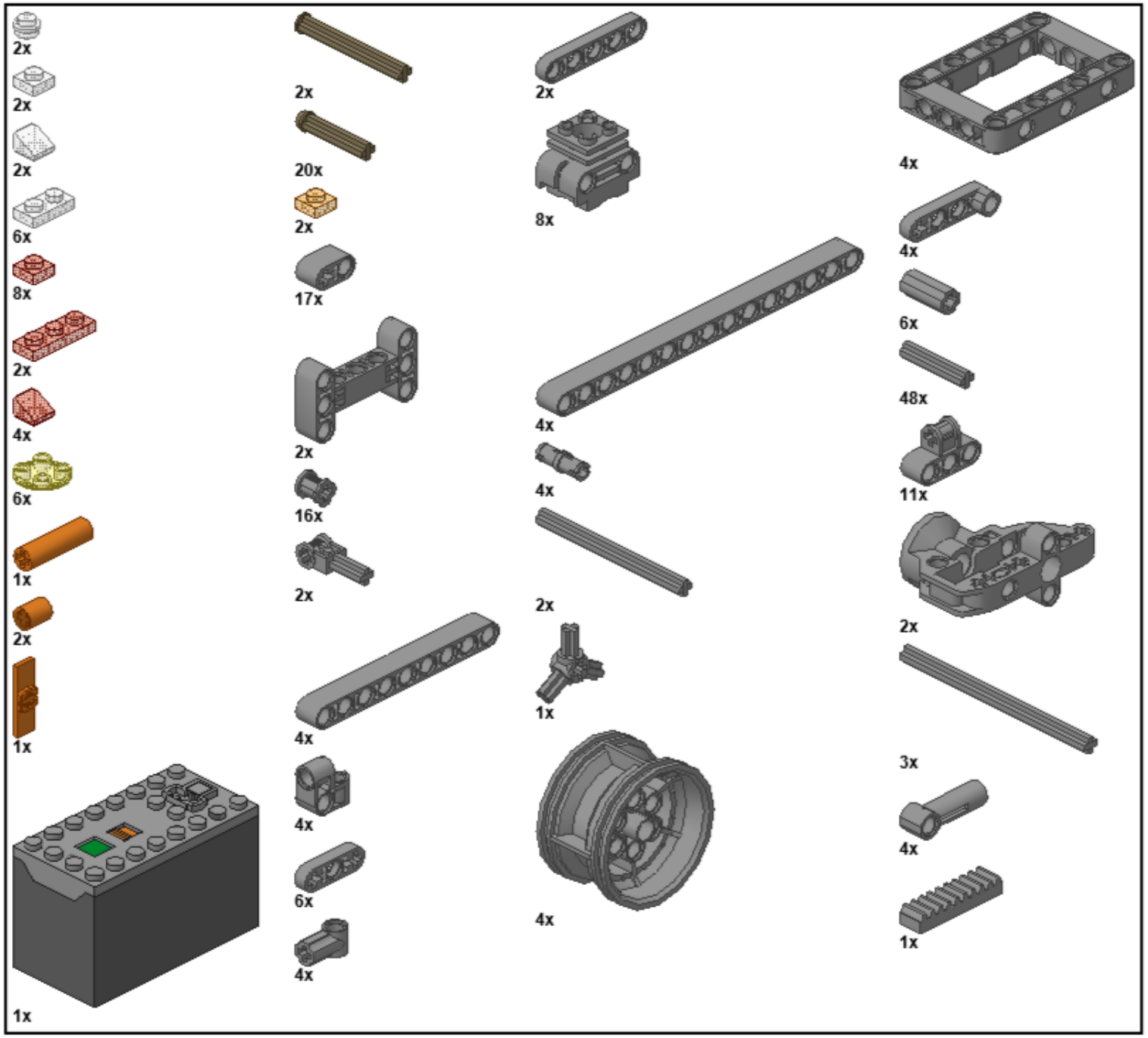
2x
2x
2x
6x
8x
2x
4x
6x
1x
2x
1x
1x
2x
20x
2x
17x
2x
16x
2x
4x
4x
6x
4x
2x
8x
4x
4x
2x
1x
4x
4x
48x
11x
2x
3x
4x
1x

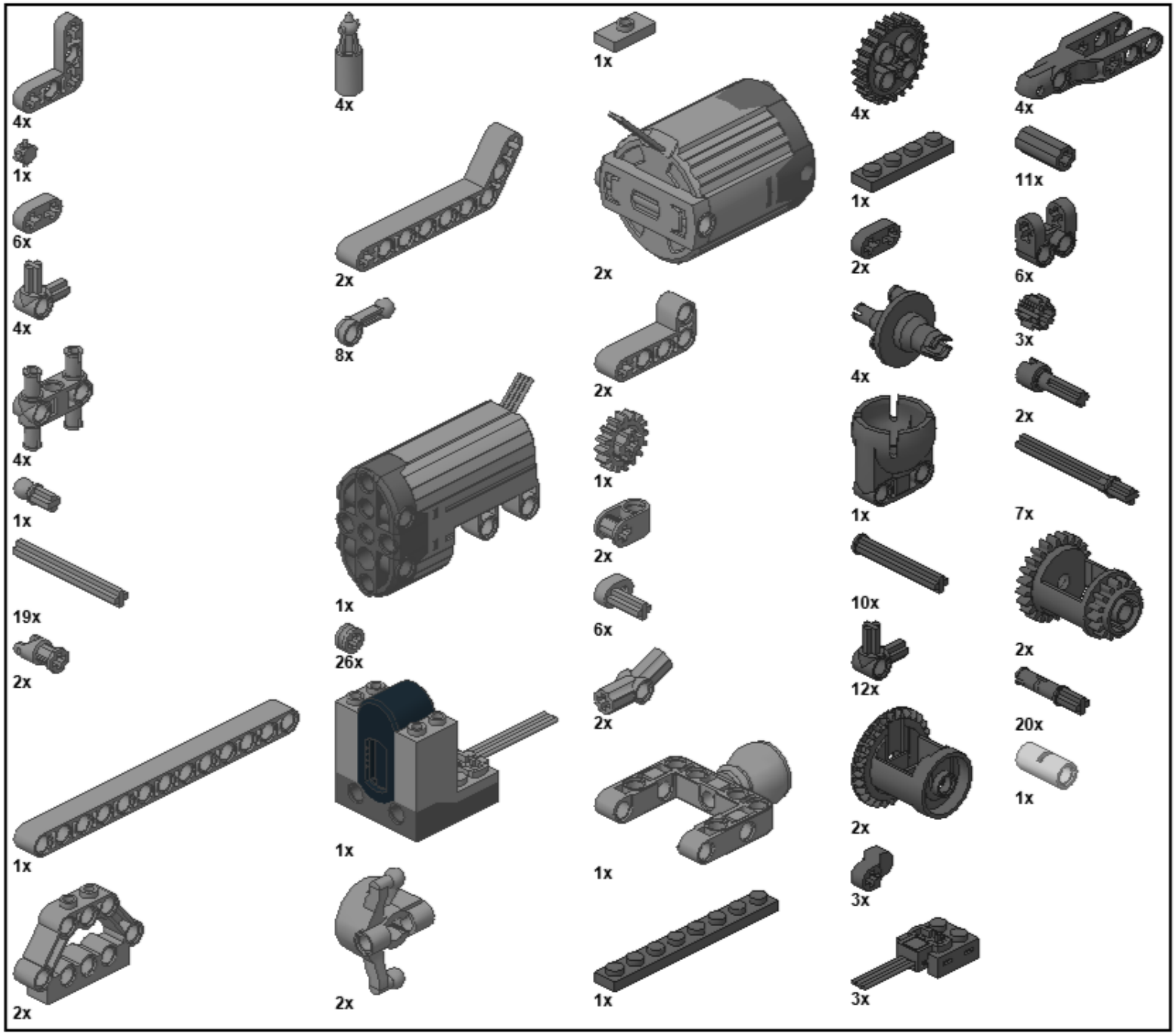
4x
1x
6x
4x
4x
1x
19x
2x
1x
2x
4x
8x
2x
1x
26x
1x
2x
1x
2x
1x
2x
6x
2x
2x
1x
1x
4x
1x
2x
10x
12x
2x
3x
3x
4x
11x
6x
3x
2x
7x
2x
20x
1x